Cash Valve™ Catalog

Pressure Regulating and Back Pressure Valves for Steam, Gas, Liquid, and Cryogenic Applications

CASH VALVE™

Cash Valve™ Catalog

July 2026

TABLE OF CONTENTS

MODEL **PAGE NUMBER**

Cash Valve Industrial Products 5
Industrial Bulletins 16
- B-series 17
- A-series 32
- E55 43
- G60 47
- FR/FRM 55
- CP 70
- K-series 74
- KP 82
- LS 89
- D51/D52. 93
- D53 96
- G4 103

Cash Valve Cryogenic Products 110
Cryogenic Bulletins 117
- A Series 118
- B Series 124
- E55 130
- FR 134
- FRM 139
- G60 145
- LTC 150
- PB5 155
- Other Cryogenic. 162
- C-776 170
- C-600 174

Cash Valve
Industrial Products

Cash Valve Regulators

Air Services

Maximum Inlet Pressure	Outlet Pressure Range	Size	Maximum Capacity		Type Number
250 psig / 17.2 barg	2 to 180 psig / 0.14 to 12.4 barg	1/4 to 3/8 in. / 8 to 10 mm	480 to 3240 SCFH / 12.9 to 86.8 Nm^3h		**A-16** Brass
300 psig / 20.7 barg	**Type A-31:** 2 to 250 psig / 0.14 to 17.2 barg **Type A-31S:** 2 to 180 psig / 0.14 to 12.4 barg	1/8 to 3/8 in. / 6 to 10 mm	480 to 3240 SCFH / 12.9 to 86.8 Nm^3h		**A-31/31S** Brass
400 psig / 27.6 barg	0 to 250 psig / 0 to 17.2 barg	1/4 to 1/2 in. / 8 to 15 mm	780 to 6600 SCFH / 20.9 to 176.9 Nm^3/h		**A-360/361** Brass
1100 psig / 75.9 barg	0 to 400 psig / 0 to 27.6 barg	1/4 to 3/8 in. / 8 to 10 mm	780 to 2700 SCFH / 20.9 to 72.4 Nm^3/h		**A-365** Brass
600 psig / 41.4 barg	**Type CP:** 15 to 600 psig / 1.0 to 41.4 barg **Type CP2:** 0 to 600 psig / 0 to 41.4 barg	**Type CP:** 1/4 in. / 8 mm **Type CP2:** 1/4 to 1/2 in. / 8 to 15 mm	60 to 1296 SCFH / 1.6 to 34.7 Nm^3/h		**CP/CP2** Brass, SST
2400 psig / 165.5 barg	40 to 750 psig / 2.8 to 51.7 barg	1/2 to 3/4 in. / 15 to 20 mm	7560 to 42,000 SCFH / 202.6 to 1125.6 Nm^3/h		**LS** Bronze

Cash Valve Regulators

Process Gas Services

Maximum Inlet Pressure	Outlet Pressure Range	Size	Maximum Capacity		Type Number
400 psig / 27.6 barg	2 to 150 psig / 0.14 to 10.3 barg	1/4 to 2 in. / 8 to 50 mm	282 to 58,080 SCFH / 8 to 1557 Nm^3h		**B** Bronze, Cast Iron[1]
720 psig / 49.6 barg	2 to 600 psig / 0.14 to 41.4 barg	1/2 to 1 in. / 15 to 25 mm	990 to 20,640 SCFH / 27 to 553 Nm^3h		**B-95** Carbon Steel, SST
700 psig / 48.3 barg	0 to 600 psig / 0 to 41.4 barg	1/4 to 1 1/2 in. / 8 to 40 mm	660 to 61,800 SCFH / 18 to 1656 Nm^3h		**G-60** Bronze, Cast Iron, Steel, SST

Cash Valve Regulators

Steam Services					
Maximum Inlet Pressure	**Outlet Pressure Range**	**Size**	**Maximum Capacity**		**Type Number**
235 psig / 16.2 barg	2 to 150 psig / 0.14 to 10.3 barg	1/4 to 2 in. / 8 to 50 mm	25 to 5699 lbs/h		**B** Bronze, Cast Iron[1]
400 psig / 27.6 barg	0 to 400 psig / 0 to 27.6 barg	1/4 to 1 1/2 in. / 8 to 40 mm	36 to 3510 lbs/h		**G-60** Bronze, Cast Iron, Steel, SST

Cash Valve Regulators

Water Services

Maximum Inlet Pressure	Outlet Pressure Range	Size	Maximum Capacity		Type Number
400 psig / 27.6 barg	2 to 150 psig / 0.14 to 10.3 barg	1/4 to 2 in. / 8 to 50 mm	0.6 to 120 gpm		**B** Bronze, Cast Iron[1]
400 psig / 27.6 barg	10 to 300 psig / 0.69 to 20.7 barg	1/2 to 2 in. / 15 to 50 mm	4 to 140 gpm		**E-55** Bronze
250 psig / 17.2 barg	2 to 180 psig / 0.14 to 12.4 barg	1/4 to 3/8 in. / 8 to 10 mm	1.2 to 4.7 gpm		**A-16** Brass
300 psig / 20.7 barg	**Type A-31:** 2 to 250 psig / 0.14 to 17.2 barg **Type A-31S:** 2 to 180 psig / 0.14 to 12.4 barg	1/8 to 3/8 in. / 6 to 10 mm	1.2 to 4.7 gpm		**A-31/31S** Brass
Type A-360/361: 400 psig / 27.6 barg **Type A-365:** 1100 psig / 75.9 barg	**Type A-360/361:** 0 to 250 psig / 0 to 17.2 barg **Type A-365:** 0 to 400 psig / 0 to 27.6 barg	1/4 to 1/2 in. / 8 to 15 mm	2 to 13.5 gpm		**A-360/361 /365** Brass
2400 psig / 165.5 barg	40 to 750 psig / 2.8 to 51.7 barg	1/2 to 3/4 in. / 15 to 20 mm	10 to 39 gpm		**LS** Bronze
700 psig / 48.3 barg	0 to 600 psig / 0 to 41.4 barg	1/4 to 1 1/2 in. / 8 to 40 mm	2 to 121 gal/h		**G-60** Bronze, Cast Iron, Steel, SST

Cash Valve Regulators

Oil Services

Maximum Inlet Pressure	Outlet Pressure Range	Size	Maximum Capacity		Type Number
250 psig / 17.2 barg	2 to 180 psig / 0.14 to 12.4 barg	1/4 to 3/8 in. / 8 to 10 mm	1.2 to 4.7 gpm		**A-16** Brass
300 psig / 20.7 barg	**Type A-31:** 2 to 250 psig / 0.14 to 17.2 barg **Type A-31S:** 2 to 180 psig / 0.14 to 12.4 barg	1/8 to 3/8 in. / 6 to 10 mm	1.2 to 4.7 gpm		**A-31/31S** Brass
Type A-360/361: 400 psig / 27.6 barg **Type A-365:** 1100 psig / 75.9 barg	**Type A-360/361:** 0 to 250 psig / 0 to 17.2 barg **Type A-365:** 0 to 400 psig / 0 to 27.6 barg	1/4 to 1/2 in. / 8 to 15 mm	2 to 13.5 gpm		**A-360/361 /365** Brass
400 psig / 27.6 barg	2 to 150 psig / 0.14 to 10.3 barg	1/4 to 2 in. / 8 to 50 mm	0.6 to 120 gpm		**B** Bronze, Cast Iron[1]
400 psig / 27.6 barg	2 to 200 psig / 0.14 to 13.8 barg	3/8 to 1 1/2 in. / 10 to 40 mm	Consult Factory		**BBC** Bronze, Cast Iron

Cash Valve Regulators

Oil Services

Maximum Inlet Pressure	Outlet Pressure Range	Size	Maximum Capacity		Type Number
600 psig / 41.4 barg	15 to 600 psig / 1.0 to 41.4 barg	1/4 in. / 8 mm	Consult Factory		**CP** Brass, SST
400 psig / 27.6 barg	10 to 300 psig / 0.69 to 20.7 barg	1/2 to 2 in. / 15 to 50 mm	4 to 140 gpm		**E-55** Bronze
700 psig / 48.3 barg	0 to 600 psig / 0 to 41.4 barg	1/4 to 1 1/2 in. / 8 to 40 mm	2 to 121 gpm		**G-60** Bronze, Cast Iron, Steel, SST
2400 psig / 165.5 barg	40 to 750 psig / 2.8 to 51.7 barg	1/2 to 3/4 in. / 15 to 20 mm	10 to 39 gpm		**LS** Bronze

Cash Valve Regulators

Backpressure Services

Maximum Inlet Pressure	Outlet Pressure Range	Size	Maximum Capacity		Type Number
400 psig / 27.6 barg	0 to 400 psig / 0 to 27.6 barg	1/2 to 2 in. / 15 to 50 mm	**Gas:** 420 to 90,000 SCFH / 11.3 to 2412 Nm^3h **Liquid:** 1.5 to 130 gpm		**FR** Cast Iron, Bronze, Carbon Steel, SST
600 psig / 41.4 barg	200 to 600 psig / 13.8 to 41.4 barg	1/2 to 2 in. / 15 to 50 mm	**Gas:** 3600 to 126,000 SCFH / 96.5 to 3377 Nm^3h **Liquid:** 10 to 162 gpm		**FR-6** Bronze, SST
250 psig / 17.2 barg	0 to 250 psig / 0 to 17.2 barg	1/2 to 2 in. / 15 to 50 mm	**Gas:** 420 to 45,000 SCFH / 11.3 to 1206 Nm^3h **Liquid:** 1.5 to 82 gpm		**FR-10** Cast Iron
600 psig / 41.4 barg	1 to 600 psig / 0.69 to 41.4 barg	1/4 to 3/8 in. / 8 to 10 mm	**Gas:** 54 to 2100 SCFH / 1.4 to 56.3 Nm^3h **Liquid:** 0.5 to 4.8 gpm		**FRM** Brass, SST
600 psig / 41.4 barg	0 to 600 psig / 0 to 41.4 barg	1/4 to 1/2 in. / 8 to 15 mm	**Gas:** 480 to 3600 SCFH / 12.9 to 96.5 Nm^3h **Liquid:** 0.7 to 10 gpm		**FRM-2** Brass, SST

Cash Valve Regulators

Backpressure Services

Maximum Inlet Pressure	Outlet Pressure Range	Size	Maximum Capacity		Type Number
150 psig / 10.3 barg	2 to 150 psig / 0.14 to 10.3 barg	1 to 2 in. / 25 to 50 mm	24 to 200 gpm		**K-5** Bronze
600 psig / 41.4 barg	15 to 600 psig / 1.0 to 41.4 barg	1/4 to 1 1/4 in. / 8 to 32 mm	2.5 to 77 gpm		**K-10** Bronze
1500 psig / 103.4 barg	25 to 1500 psig / 1.7 to 103.4 barg	1/4 to 3/4 in. / 8 to 20 mm	1 to 33 gpm		**K-15** Bronze
200 psig / 13.8 barg	0 to 260 psig / 0 to 17.9 barg	1 to 2 in. / 25 to 50 mm	**Gas:** 12,600 to 180,600 SCFH / 338 to 4840 Nm^3h **Liquid:** 35 to 210 gpm		**KP** Brass

Cash Valve Regulators

Vacuum Services

Maximum Inlet Pressure	Outlet Pressure Range	Size	Maximum Capacity		Type Number
250 psig / 17.2 barg	0 to 30 in Hg / 0 to 762 mm Hg	1/2 to 2 in. / 15 to 50 mm	- - - -		**D-51** Bronze
250 psig / 17.2 barg	0 to 30 in Hg / 0 to 762 mm Hg	1/2 to 2 in. / 15 to 50 mm	- - - -		**D-52** Bronze

Cash Valve Regulators

Compressor Services

Maximum Inlet Pressure	Outlet Pressure Range	Size	Maximum Capacity		Type Number
250 psig / 17.2 barg	0 to 250 psig / 0 to 17.2 barg	1/2 to 2 in. / 15 to 50 mm	Refer to Graph in Bulletin		**D-53** Bronze
600 psig / 41.4 barg	15 to 600 psig / 1.0 to 41.4 barg	1/4 in. / 8 mm	Refer to Graph in Bulletin		**CP** Brass, SST
600 psig / 41.4 barg	0 to 600 psig / 0 to 41.4 barg	1/4 to 1/2 in. / 8 to 15 mm	Refer to Graph in Bulletin		**CP2** Brass, SST

Industrial Bulletins

CASH VALVE™ B SERIES PRESSURE REGULATORS

Single seated, spring loaded, direct acting diaphragm-type pressure reducing and regulating valves for a broad range of services

FEATURES

- Reduce high inlet pressures to lower outlet pressures within close limits.
- Ruggedly built for long service life without maintenance.
- Simple design for easy maintenance and on-line repairs.
- Broad materials choice to suit a variety of applications.
- Self-supporting inbuilt strainer screen protects working parts and is cleaned easily.
- Easy pressure adjustment via standard square head adjusting screw and hex locknut. T-handle and aluminum handwheel option available.
- Optional construction for cryogenic service.
- Pre-packaged repair kits available for selected models to simplify maintenance.
- Every regulator supplied with pre-set delivery pressure.
- Each valve assembled and tested prior to shipment.

GENERAL APPLICATION

B Series Pressure Reducing Valves and Regulators include models suitable for air, water, steam, oil and other liquids with versions also available for cryogenic liquids and gases. Type BBC is specifically designed for heavy oil and viscous fluid applications.

TECHNICAL DATA[1]

Materials:	Cast iron, bronze, carbon steel, stainless steel
Sizes:	¼ to 2 in. (8 to 50 mm)
Connections:	NPTF
Maximum inlet pressures	
Air or water:	720 psig (49.6 barg)
Steam:	400 psig (27.6 barg)
Heavy oil or viscous fluids:	400 psig (27.6 psig)
Maximum reduced pressures	
Air, water or steam:	600 psig (41.4 barg)
Heavy oil or viscous fluids:	200 psig (13.8 barg)
Temperature range[2]:	-20 to 400°F (-29 to 204°C)

1. Refer to General Specifications Table in page 2 for more information.
2. Cryogenic standard temperature range is not included.

© 2017 Emerson. All Rights Reserved.

GENERAL SPECIFICATIONS

Type	Body Material	Spring Chamber Material	Service	Body Size, in. (mm)	Materials		Maximum Inlet Pressure, psig (barg)	Maximum Outlet Pressure, psig (barg)	Temperature Range, °F (°C)
					Diaphragm	Seat (Disc)			
B	Bronze	Bronze	Steam	¼, ⅜, 1¼, 1½ and 2 (8, 10, 32, 40 and 50)	Bronze	PTFE	235 (16.2)	150 (10.3)	-20 to 400 (-29 to 204)
					Monel	PTFE	235 (16.2)	150 (10.3)	-20 to 400 (-29 to 204)
				½, ¾ and 1 (15, 20 and 25)	Bronze	PTFE	235 (16.2)	150 (10.3)	-20 to 400 (-29 to 204)
					Monel	PTFE	235 (16.2)	150 (10.3)	-20 to 400 (-29 to 204)
					316 SST	PTFE	235 (16.2)	150 (10.3)	-20 to 400 (-29 to 204)
			Water/Air	¼ to 2 (8 to 50)	NBR	NBR	400 (27.6)	150 (10.3)	-20 to 180 (-29 to 82)
	Iron	Iron	Steam	¼, ⅜ and ½ (8, 10 and 15)	Monel	PTFE	150 (10.3)	125 (8.6)	-20 to 400 (-29 to 204)
					Bronze	PTFE	150 (10.3)	125 (8.6)	-20 to 400 (-29 to 204)
				¾ to 2 (20 to 50)	Monel	PTFE	200 (13.8)	125 (8.6)	-20 to 400 (-29 to 204)
					Bronze	PTFE	200 (13.8)	125 (8.6)	-20 to 400 (-29 to 204)
			Water/Air	¼ to 2 (8 to 50)	NBR	NBR	200 (13.8)	150 (10.3)	-20 to 180 (-29 to 82)
BBC	Bronze	Bronze	Heavy Oil	⅜, 1¼ and 1½ (10, 32 and 40)	NBR	303 SST	400 (27.6)	200 (13.8)	-20 to 180 (-29 to 82)
					Monel	303 SST	250 (17.2)	200 (13.8)	-20 to 400 (-29 to 204)
				½, ¾ and 1 (15, 20 and 25)	NBR	303 SST	400 (27.6)	200 (13.8)	-20 to 180 (-29 to 82)
					FKM	303 SST	400 (27.6)	200 (13.8)	-20 to 180 (-29 to 82)
					Monel	303 SST	250 (17.2)	200 (13.8)	-20 to 400 (-29 to 204)
	Iron	Iron	Heavy Oil	⅜ (10)	NBR	303 SST	200 (13.8)	150 (10.3)	-20 to 180 (-29 to 82)
					Monel	303 SST	150 (10.3)	125 (8.6)	-20 to 400 (-29 to 204)
				½, ¾ and 1 (15, 20 and 25)	NBR	303 SST	200 (13.8)	150 (10.3)	-20 to 180 (-29 to 82)
					FKM	303 SST	200 (13.8)	150 (10.3)	-20 to 180 (-29 to 82)
					Monel	303 SST	200 (13.8)	125 (8.6)	-20 to 400 (-29 to 204)
				1¼ and 1½ (32 and 40)	NBR	303 SST	200 (13.8)	150 (10.3)	-20 to 180 (-29 to 82)
					Monel	303 SST	200 (13.8)	125 (8.6)	-20 to 400 (-29 to 204)
B95	316 SST	316 SST	Steam	½ (15)	316 SST	PTFE	400 (27.6)	400 (27.6)	-20 to 400 (-29 to 204)
				¾ and 1 (20 and 25)	316 SST	PTFE	400 (27.6)	250 (17.2)	-20 to 400 (-29 to 204)
			Water/Air	½ (15)	NBR	NBR	720 (49.6)	600 (41.4)	-20 to 180 (-29 to 82)
				¾ (20)	NBR	NBR	720 (49.6)	250 (17.2)	-20 to 180 (-29 to 82)
				1 (25)	NBR	NBR	720 (49.6)	400 (27.6)	-20 to 180 (-29 to 82)
	Steel	Steel	Steam	½ (15)	316 SST	PTFE	400 (27.6)	400 (27.6)	-20 to 400 (-29 to 204)
				¾ and 1 (20 and 25)	316 SST	PTFE	400 (27.6)	250 (17.2)	-20 to 400 (-29 to 204)
			Water/Air	½ (15)	NBR	NBR	720 (49.6)	600 (41.4)	-20 to 180 (-29 to 82)
				¾ (20)	NBR	NBR	720 (49.6)	250 (17.2)	-20 to 180 (-29 to 82)
				1 (25)	NBR	NBR	720 (49.6)	400 (27.6)	-20 to 180 (-29 to 82)

TYPE B: WATER AND AIR SERVICE (UP TO 180°F (82°C))

Model overview

Type B Regulators are available in ¼ through 2 in. (8 to 50 mm) sizes with either iron or bronze bodies and feature a variety of optional internal trim (diaphragm, piston and cylinder) that enable them to be used in a wide range of applications.

Each regulator is equipped with a pressure spring selected to provide the desired outlet or reduced delivery pressure setting. Depending on the adjusting spring installed, delivery pressures may be adjusted from a minimum of 2 psig (0.14 barg) to a maximum of 150 psig (10.3 barg). The range of adjustment or satisfactory working range of the individual springs that may be fitted to each valve size is listed in the spring range table on page 5.

The regulator is designed for systems with a maximum operating temperature of 180°F (82°C). In addition to the standard specifications indicated in the table, any combination of body material, piston cylinder and diaphragm is available to special order.

Application

Type B Water and Air Regulators are suitable for a variety of applications including paint spray equipment, dishwashers, air tanks and equipment, food, chemical and industrial process gases and many other applications.

TYPE B
Pressure regulator/water and air

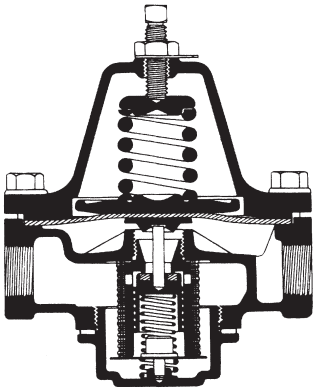

Service	Maximum initial pressure, psig (barg)	Maximum reduced pressure, psig (barg)	Body material		Piston and cylinder	Seat disc material	Diaphragm material	Maximum operating temperature, °F (°C)
			Iron	Bronze	Brass	NBR	NBR	
Water or air	200 (13.8)	150 (10.3)	X		X	X	X	180 (82)
	400 (27.6)	150 (10.3)		X	X	X	X	180 (82)

TYPE B: STEAM SERVICE (UP TO 400°F (204°C))

These valves are designed for steam operating temperatures up to 400°F (204°C) and are available in ¼ to 2 in. (8 to 50 mm) sizes with either iron or bronze bodies. Iron body valves have a SST-filled PTFE seat and are for systems with initial pressures up to 200 psig (13.8 barg); bronze bodies are for initial pressures up to 235 psig (16.2 barg).

Valves will normally be equipped as indicated in the table but other combinations of body material, piston-cylinder and diaphragm are available to special order.

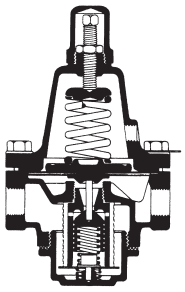

Type B steam with differential construction interior

Application

The Type B Steam Pressure Reducing and Regulating Valve is ideally suited for installation in pressing irons, steam cookers, degreasers, sterilizers, vulcanizers and hundreds of other applications.

Type B Steam Regulators can also be furnished with a differential pressure control feature which may be desirable in steam/oil atomizing service.

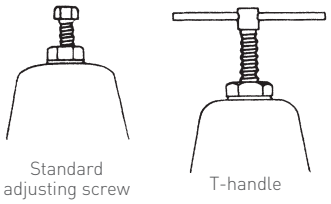

Options

Optional differential pressure control

The Type B Steam Regulator can be factory modified to serve as a constant differential pressure control valve by incorporating a ¼ in. (8 mm) side tap in the spring housing.

In a typical steam-oil atomizing installation, fluid loading pressure is introduced above the diaphragm of the regulator and steam is delivered through the valve at a regulated pressure higher than the loading pressure, with the difference in pressure being determined by the diaphragm spring setting. The outlet steam pressure is maintained automatically to provide a constant, fixed pressure differential between the steam pressure and the oil pressure. Variations in the loading pressure are reflected in a pound-for-pound change in the discharge pressure.

Valves equipped with the optional differential pressure control are fitted with a pressure-tight closing cap and gasket over the pressure adjusting screw and a gasket above the diaphragm to ensure a good seal between the spring housing and the valve body.

Service	Maximum initial pressure, psig (barg)	Maximum reduced pressure, psig (barg)	Body material		Piston and cylinder	Seat disk material	Diaphragm material			Maximum operating temperature, °F (°C)
			Iron	Bronze	Brass	PTFE	Bronze	Monel®	316 SST[1]	
Saturated steam	150 (10.3)	125 (8.6)	X		X	X	X	X		400 (204)
	200 (13.8)	125 (8.6)	X		X	X	X	X		400 (204)
	235 (16.2)	150 (10.3)		X	X	X	X	X	X	400 (204)

1. Available for sizes ½ to 1 in. (15 to 25 mm) only.

TYPICAL STEAM-OIL ATOMIZING INSTALLATION

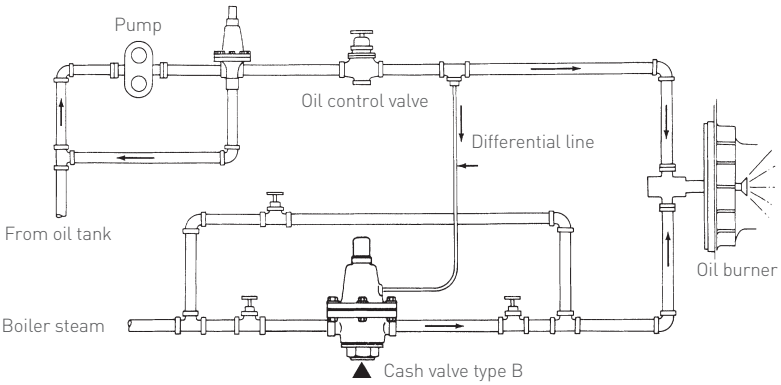

Monel® is a mark owned by Special Metals Corporation Group

STANDARD SPRING RANGES, psig (barg)

Spring Material	Size, in. (mm)	1	2	3	4	5	6
Steel	¼ (8)	2 to 25 (0.1 to 1.7)	2 to 60 (1.4 to 4.1)	30 to 100 (2.1 to 6.9)	50 to 150 (3.4 to 10.3)	- - - -	- - - -
	⅜ (10)	2 to 30 (0.1 to 2.1)	2 to 70 (1.4 to 4.8)	40 to 110 (2.8 to 7.6)	90 to 150 (6.2 to 10.3)	- - - -	- - - -
	½ (15)	2 to 30 (0.1 to 2.1)	10 to 50 (0.7 to 3.4)	30 to 125 (2.1 to 8.6)	50 to 150 (3.4 to 10.3)	- - - -	- - - -
	¾ (20)	2 to 20 (0.1 to 1.4)	10 to 35 (0.7 to 2.4)	30 to 75 (2.1 to 5.2)	50 to 110 (3.4 to 7.6)	105 to 150 (7.2 to 10.3)	- - - -
	1 (25)	2 to 20 (0.1 to 1.4)	10 to 45 (0.7 to 3.1)	20 to 60 (1.4 to 4.1)	55 to 100 (3.8 to 6.9)	90 to 150 (6.2 to 10.3)	- - - -
	1¼ (32)	2 to 15 (0.1 to 1.0)	10 to 30 (0.7 to 2.1)	20 to 50 (1.4 to 3.4)	45 to 100 (3.1 to 6.9)	90 to 150 (6.2 to 10.3)	- - - -
	1½ (40)	2 to 15 (0.1 to 1.0)	10 to 30 (0.7 to 2.1)	20 to 50 (1.4 to 3.4)	45 to 100 (3.1 to 6.9)	90 to 150 (6.2 to 10.3)	- - - -
	2 (50)	2 to 20 (0.1 to 1.4)	10 to 60 (0.7 to 4.1)	20 to 100 (1.4 to 6.9)	90 to 150 (6.2 to 10.3)	- - - -	- - - -

MATERIALS OF CONSTRUCTION

Part description	Materials
Adjusting screw cap[1]	Brass
Cap gasket[1]	Fiber
Body	Iron or bronze
Spring chamber	Iron or bronze
Adjusting spring	Steel
Pressure plate	Cast iron or bronze
Diaphragm	NBR, bronze, Monel® or 316 SST[3]
Diaphragm gasket[2]	Aramid fiber
Pusher post button	Brass
Cylinder	Brass
Piston	Brass
Pusher post	Brass
Seat disk	NBR or SST-filled PTFE
Piston spring	302 Stainless steel
Strainer screen	Monel®
Bottom gasket	Aramid fiber or PTFE
Bottom plug	Brass

NOTES

1. For pressure loaded valves only
2. For use with metal diaphragms only
3. Available for sizes ½ to 1 in. (15 to 25 mm) steam service only

DIMENSIONS

Type B valve size, in. (mm)	Dimensions, in. (mm)			Shipping weight, lbs (kg)	
	A	B	C	Iron	Bronze
¼ (8)	3.03 (76.9)	3.32 (84.2)	1.75 (44.4)	2¾ (1.3)	3 (1.4)
⅜ (10)	3.87 (95.2)	4.75 (121)	1.62 (40.9)	5 (2.3)	5½ (2.3)
½ (15)	4.47 (114)	5.17 (131)	2.05 (52.0)	7½ (3.4)	8 (3.6)
¾ (20)	5.13 (129)	4.63 (118)	1.86 (47.2)	9 (4.1)	10 (4.5)
1 (25)	5.88 (149)	6.25 (159)	2.13 (57.5)	12 (5.4)	16 (7.3)
1¼ (32)	6.19 (157)	6.63 (168)	2.63 (66.8)	18 (8.2)	20 (9.1)
1½ (40)	6.25 (159)	6.0 (152)	2.63 (66.8)	18 (8.2)	20 (9.1)
2 (50)	9.19 (233)	8.5 (216)	3.5 (88.9)	32 (14.5)	37 (16.8)

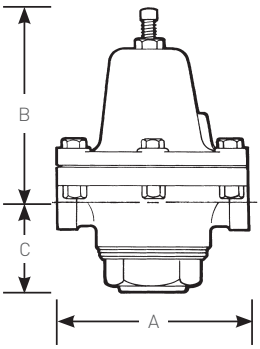

Monel® is a mark owned by Special Metals Corporation Group

B SERIES

The capacity of any regulator is governed by two factors:

1. Pressure differential or the difference between the inlet and outlet pressure.
2. A characteristic known as fall-off or droop, by which the outlet pressure drops slightly as flow starts through the valve and drops off even more as increased demand requires increased flow.

The rates of flow stated on the following charts are based on assumed conditions, which may be considered average for a given installation.

B SERIES WATER CAPACITY INFORMATION

Inlet pressure, psig (barg)	Outlet pressure, psig (barg)	Gallons inlet per minute by size, in.							
		¼	⅜	½	¾	1	1¼	1½	2
25 (1.7)	15 (1)	0.6	1.0	2.6	4.0	5.7	9.2	10.4	16.0
	10 (0.7)	0.6	1.2	2.9	4.5	6.4	10.4	11.7	18.0
50 (3.4)	40 (2.8)	0.8	1.4	3.5	5.5	7.9	12.7	14.3	22.0
	25 (1.7)	0.8	1.6	3.8	6.0	8.6	13.8	15.6	24.0
	10 (0.7)	0.8	1.6	3.8	6.0	8.6	13.8	15.6	24.0
75 (5.2)	65 (4.5)	1.0	2.0	4.8	7.5	10.7	17.3	19.5	30.0
	50 (3.4)	1.1	2.1	5.1	8.0	11.4	18.4	20.4	32.0
	25 (1.7)	1.3	2.3	5.8	9.0	12.9	20.7	23.4	36.0
	10 (0.7)	1.3	2.3	5.8	9.0	12.9	20.7	23.4	36.0
100 (6.9)	90 (6.2)	1.5	2.7	6.7	10.5	15.0	24.2	27.3	42.0
	75 (5.2)	1.6	3.0	7.4	11.5	16.4	26.5	29.9	46.0
	50 (3.4)	1.7	3.2	8.0	12.5	17.9	28.8	32.5	50.0
	25 (1.7)	1.8	3.4	8.3	13.0	18.6	29.9	33.8	52.0
125 (8.6)	100 (6.9)	1.5	2.9	7.0	11.0	15.7	25.3	28.6	44.0
	75 (5.2)	1.7	3.3	8.0	12.5	17.9	28.8	32.5	50.0
	50 (3.4)	2.0	3.6	9.0	14.0	20.0	32.2	36.4	56.0
	25 (1.7)	2.0	3.6	9.0	14.0	20.0	32.2	36.4	56.0
150 (10.3)	140 (9.7)	1.5	2.9	7.0	11.0	15.7	25.3	28.6	44.0
	100 (6.9)	1.9	3.5	8.6	13.5	19.3	27.0	35.1	54.0
	75 (5.2)	2.0	3.8	9.3	14.5	20.7	33.4	37.7	58.0
	50 (3.4)	2.2	4.0	9.9	15.5	22.2	35.7	40.3	62.0
	25 (1.7)	2.2	4.0	9.9	15.5	22.2	35.7	40.3	62.0
200 (13.8)	150 (10.3)	1.9	3.5	8.6	13.5	19.3	31.1	35.1	54.0
	100 (6.9)	2.2	4.0	9.9	15.5	22.2	35.7	40.3	62.0
	75 (5.2)	2.5	4.6	11.2	17.5	25.0	40.3	45.5	70.0
	50 (3.4)	2.7	4.9	12.2	19.0	27.2	43.7	49.4	76.0
	25 (1.7)	2.7	4.9	12.2	19.0	27.2	43.7	49.4	76.0
250 (17.2)	150 (10.3)	2.1	3.9	9.6	15.0	21.5	34.5	39.0	60.0
	100 (6.9)	2.5	4.6	11.2	17.5	25.0	40.3	45.5	70.0
	75 (5.2)	2.8	5.2	12.8	20.0	28.6	46.0	52.0	80.0
	50 (3.4)	2.9	5.5	13.4	21.0	30.0	48.3	54.6	84.0
	25 (1.7)	2.9	5.5	13.4	21.0	30.0	48.3	54.6	84.0
300/400 (20.7/27.6)	150 (10.3)	2.5	4.6	11.2	17.5	25.0	40.3	45.5	70.0
	100 (6.9)	3.5	6.5	16.0	25.0	35.8	57.5	65.0	100.0
	75 (5.2)	4.2	7.8	19.2	30.0	42.9	69.0	78.0	120.0
	50 (3.4)	4.2	7.8	19.2	30.0	42.9	69.0	78.0	120.0

NOTES

1. Capacities are based on a 20% droop.
2. To obtain capacities for regulators using metal diaphragms, multiply the table values by 0.7

B SERIES AIR CAPACITY INFORMATION

Inlet pressure, psig (barg)	Outlet pressure, psig (barg)	Air capacity inlet in SCFM by size, in.							
		¼	⅜	½	¾	1	1¼	1½	2
25 (1.7)	15 (1)	4.7	7.0	16.5	23.5	37.6	56.4	65.8	105.8
	10 (0.7)	5.0	7.5	17.5	25.0	40.0	60.0	70.0	112.5
50 (3.4)	40 (2.8)	7.0	10.5	24.5	35.0	56.0	84.0	98.0	157.5
	25 (1.7)	8.2	12.3	28.7	41.0	65.6	98.4	114.8	184.5
	10 (0.7)	8.2	12.3	28.7	41.0	65.6	98.4	114.8	184.5
75 (5.2)	65 (4.5)	7.5	11.3	26.3	37.5	60.0	90.0	105.0	168.8
	50 (3.4)	8.5	12.8	29.8	42.5	68.0	102.0	115.0	191.3
	25 (1.7)	11.0	16.5	38.5	55.0	88.0	132.0	154.0	247.5
	10 (0.7)	11.0	16.5	38.5	55.0	88.0	132.0	154.0	247.5
100 (6.9)	90 (6.2)	9.0	13.5	31.5	45.0	72.0	108.0	126.0	203.0
	75 (5.2)	12.0	18.0	42.0	60.0	96.0	144.0	168.0	270.0
	50 (3.4)	15.0	22.5	52.5	75.0	120.0	180.0	210.0	337.5
	25 (1.7)	15.0	22.5	52.5	75.0	120.0	180.0	210.0	337.5
125 (8.6)	100 (6.9)	13.0	19.5	45.5	65.0	104.0	156.0	182.0	293.0
	75 (5.2)	15.0	22.5	52.5	75.0	120.0	180.0	236.0	338.0
	50 (3.4)	18.0	27.0	63.0	90.0	144.0	216.0	252.0	405.0
	25 (1.7)	18.0	27.0	63.0	90.0	144.0	216.0	252.0	405.0
150 (10.3)	140 (9.7)	15.0	22.5	52.5	75.0	120.0	180.0	210.0	338.0
	100 (6.9)	18.0	27.0	63.0	90.0	144.0	216.0	252.0	405.0
	75 (5.2)	23.0	34.5	80.5	115.0	184.0	276.0	322.0	518.0
	50 (3.4)	25.0	37.5	87.5	125.0	200.0	300.0	350.0	563.0
	25 (1.7)	25.0	37.5	87.5	125.0	200.0	300.0	350.0	563.0
200 (13.8)	150 (10.3)	19.0	28.5	66.5	95.0	152.0	228.0	266.0	428.0
	100 (6.9)	23.0	34.5	80.5	115.0	184.0	276.0	322.0	518.0
	75 (5.2)	27.0	40.5	94.5	135.0	216.0	324.0	378.0	608.0
	50 (3.4)	29.0	43.5	101.5	145.0	232.0	348.0	406.0	653.0
	25 (1.7)	29.0	43.5	101.5	145.0	232.0	348.0	406.0	653.0
250 (17.2)	150 (10.3)	25.0	37.5	87.5	125.0	200.0	300.0	350.0	563.0
	100 (6.9)	33.0	49.5	115.5	165.0	264.0	396.0	462.0	743.0
	75 (5.2)	37.0	55.5	129.5	185.0	296.0	444.0	518.0	833.0
	50 (3.4)	37.0	55.5	129.5	185.0	296.0	444.0	518.0	833.0
	25 (1.7)	37.0	55.5	129.5	185.0	296.0	444.0	518.0	833.0
300/400 (20.7/27.6)	150 (10.3)	34.0	51.0	115.0	170.0	272.0	408.0	476.0	765.0
	100 (6.9)	37.0	55.5	129.5	185.0	296.0	444.0	518.0	833.0
	75 (5.2)	43.0	64.5	150.5	215.0	344.0	516.0	602.0	968.0
	50 (3.4)	43.0	64.5	150.5	215.0	344.0	516.0	602.0	968.0

NOTES

1. Capacities are based on a 20% droop.
2. To obtain capacities for regulators using metal diaphragms, multiply the table values by 0.7

B SERIES STEAM CAPACITY INFORMATION (WITH PTFE SEAT)

Inlet pressure, psig (barg)	Outlet pressure, psig (barg)	Steam lbs per hour by size, in.							
		¼	⅜	½	¾	1	1¼	1½	2
25 (1.7)	15 (1)	25	38	88	126	202	302	353	567
	10 (0.7)	25	38	88	126	202	302	353	567
50 (3.4)	40 (2.8)	36	55	129	183	294	440	514	826
	25 (1.7)	42	63	137	210	336	504	588	945
	10 (0.7)	42	63	137	210	336	504	588	945
75 (5.2)	65 (4.5)	39	59	139	197	316	473	553	889
	50 (3.4)	53	78	185	263	421	631	736	1184
	25 (1.7)	68	102	239	342	546	820	956	1537
	10 (0.7)	69	102	239	342	546	820	956	1537
100 (6.9)	90 (6.2)	49	91	154	231	371	560	654	1050
	75 (5.2)	84	126	294	420	672	1008	1176	1890
	50 (3.4)	85	129	300	427	683	1025	1196	1922
	25 (1.7)	85	129	300	427	683	1025	1196	1922
125 (8.6)	100 (6.9)	88	133	266	441	706	1008	1165	1985
	75 (5.2)	111	165	385	550	881	1320	1540	2477
	50 (3.4)	115	172	400	573	916	1375	1603	2577
	25 (1.7)	115	172	400	573	916	1375	1603	2577
150 (10.3)	140 (9.7)	63	95	126	210	350	525	616	994
	125 (8.6)	112	168	392	560	896	1344	1568	2520
	100 (6.9)	116	174	405	578	924	1387	1618	2603
	75 (5.2)	137	204	479	683	1093	1639	1912	3074
	50 (3.4)	137	204	479	683	1093	1639	1912	3074
200 (13.8)	150 (10.3)	130	195	454	648	1037	1555	1814	2916
	125 (8.6)	153	230	535	763	1221	1831	2136	3434
	100 (6.9)	179	267	626	893	1429	2143	2500	4019
	75 (5.2)	179	267	626	893	1429	2143	2500	4019
225 (15.5)	150 (10.3)	190	287	671	956	1532	2297	2681	4308
	125 (8.6)	214	322	750	1072	1715	2572	3002	4823
	100 (6.9)	230	344	804	1147	1835	2752	3212	5162
	75 (5.2)	230	344	804	1147	1835	2752	3212	5162
250 (17.2)	150 (10.3)	196	294	686	980	1568	2352	2744	4410
	125 (8.6)	253	379	888	1267	2027	3039	3546	5699
	100 (6.9)	253	379	888	1267	2027	3039	3546	5699

NOTES

1. Capacities are based on a 20% droop.

TYPE B SELECTION GUIDE

Example:	B	F	A	W	S	S	B	B	S	01	A	D	1

Model
- **B** B valve

Material of construction
- **Z** Bronze
- **F** Iron

Valve size

A	¼ in. (8 mm)	**E**	1 in. (25 mm)
B	⅜ in. (10 mm)	**F**	1¼ in. (32 mm)
C	½ in. (15 mm)	**G**	1½ in. (40 mm)
D	¾ in. (20 mm)	**H**	2 in. (50 mm)

Service
- **W** Water/air
- **S** Steam

Body style/connection style
- **S** Side inlet/side outlet - straight thru w/ NPTF connections

Spring chamber style
- **S** Standard
- **D** w/ Pressure screw cap and differential connection

Diaphragm material
- **B** NBR (water/air)
- **Z** Bronze (steam)
- **M** Monel® (steam)
- **G** 316 SST (steam, sizes ½ to 1 in. (15 to 25 mm) only)

Seat material
- **B** NBR (water/air)
- **T** PTFE (steam)

Pressure screw style
- **S** Standard
- **T** T-handle

Variation
- **01** Standard

Design revision
- **A** Indicates 2nd design revision

Spring material
- **D** Steel

Spring Range

Refer to table on page 5

HOW TO ORDER

To order, specify Cash Valve type by specific series designation (i.e. Type B).
Also state the following:

1. Valve size.
2. Service (water, air, oil, etc.).
3. Inlet pressure.
4. Outlet or delivery pressure range and setting.
5. Maximum required flow rate.
6. System operating temperature.
7. Optional features, if any, as described for a specific valve.

NOTES

1. NPTF, also referred to as "Dryseal" thread, is designed to provide a more leak-free seal without the use of PTFE tape or other sealant compound. NPTF threads are interchangeable with NPT threads and are standard on all Cash Valve products.
2. Type B Valves are also available with special modifications. Consult the factory for details.

Monel® is a mark owned by Special Metals Corporation Group

TYPE B95

Model overview

The Type B95 is a fully automatic pressure reducing valve which is ideal for use in the pressure build-up circuit for either liquid or gas service and is also available in a cryogenic version.

Type B95 valves are designed for operating temperatures from 0 to 400°F (-17 to 204°C)[1], depending on construction, and are available in ½, ¾ and 1 in. (15, 20 and 25 mm) sizes with either carbon steel or stainless steel bodies with NPTF threaded connections. They offer the option of either NBR or 316 SST diaphragms, with a PTFE or NBR seat.

They are suitable for inlet pressures up to 720 psig at 180°F (49.6 barg at 82°C) or up to 400 psig at 400°F (240 barg at 204°C). In addition to the standard specification, they offer an optional closing cap, T-handle and are also available with a drilled and tapped spring chamber for differential service.

Application

Type B95 Valves are suitable for use on air, water, steam, oil and other liquids and also for cryogenic liquids and gases.

1. Cryogenic service temperature range not included.

Service	Maximum initial pressure, psig (barg)	Maximum reduced pressure, psig (barg)	Body material		Piston and cylinder	Seat disk material		Diaphragm material		Maximum operating temperature, °F (°C)
			316 SST	Carbon steel	303 SST	NBR	PTFE	NBR	316 SST	
Steam	400 (27.6)	400 (27.6)	X		X		X		X	400 (204)
	400 (27.6)	400 (27.6)		X	X		X		X	400 (204)
Water and Air	720 (49.6)	600 (41.4)	X		X	X		X		180 (82)
	720 (49.6)	600 (41.4)		X	X	X		X		180 (82)

STANDARD SPRING RANGES, psig (barg)

Service	Spring Material	Size, in. (mm)	1	2	3	4	5	6	7
Water and Air, Steam	Steel	½ (15)	2 to 30 (0.1 to 2.1)	10 to 50 (0.7 to 3.4)	30 to 125 (2.1 to 8.6)	50 to 150 (3.4 to 10.3)	- - - -	- - - -	- - - -
		¾ (20)	2 to 20 (0.1 to 1.4)	10 to 35 (0.7 to 2.4)	30 to 75 (2.1 to 5.2)	50 to 110 (3.4 to 7.6)	105 to 150 (7.2 to 10.3)	- - - -	- - - -
		1 (25)	2 to 20 (0.1 to 1.4)	10 to 45 (0.7 to 3.1)	20 to 60 (1.4 to 4.1)	55 to 100 (3.8 to 6.9)	90 to 150 (6.2 to 10.3)	- - - -	- - - -
Water and Air	SST	½ (15)	10 to 30 (0.7 to 2.1)	20 to 75 (1.4 to 5.2)	25 to 125 (1.7 to 8.6)	100 to 200 (6.9 to 13.8)	150 to 250 (10.3 to 17.2)	250 to 400 (17.2 to 27.6)	200 to 600 (13.8 to 41.4)
		¾ (20)	10 to 30 (0.7 to 2.1)	20 to 70 (1.4 to 4.8)	30 to 100 (2.1 to 6.9)	50 to 150 (3.4 to 10.3)	100 to 225 (6.9 to 15.5)	150 to 250 (10.3 to 17.2)	- - - -
		1 (25)	10 to 35 (0.7 to 2.4)	20 to 60 (1.4 to 4.1)	50 to 100 (3.4 to 6.9)	50 to 150 (3.4 to 10.3)	100 to 250 (6.9 to 17.2)	200 to 400 (13.8 to 27.6)	- - - -
Steam	SST	½ (15)	10 to 30 (0.7 to 2.1)	20 to 75 (1.4 to 5.2)	25 to 125 (1.7 to 8.6)	100 to 200 (6.9 to 13.8)	150 to 250 (10.3 to 17.2)	250 to 400 (17.2 to 27.6)	- - - -
		¾ (20)	10 to 30 (0.7 to 2.1)	20 to 70 (1.4 to 4.8)	30 to 100 (2.1 to 6.9)	50 to 150 (3.4 to 10.3)	100 to 225 (6.9 to 15.5)	150 to 250 (10.3 to 17.2)	- - - -
		1 (25)	10 to 35 (0.7 to 2.4)	20 to 60 (1.4 to 4.1)	50 to 100 (3.4 to 6.9)	50 to 150 (3.4 to 10.3)	100 to 250 (6.9 to 17.2)	- - - -	- - - -

MATERIALS OF CONSTRUCTION

Part description	Materials
Adjusting screw	SST
Spring housing	316 SST or steel
Spring button	316 SST
Spring	Steel
Pressure plate	Cast iron
Diaphragm	NBR, 316 SST
Diaphragm gasket	Aramid fiber
Diaphragm	316 SST
Body	316 SST or Carbon steel
Cylinder	303 SST
Seat disc	PTFE or SST
Body seat	303 SST
Bottom plug gasket	Aramid fiber
Piston	303 SST
Pusher post	303 SST
Piston spring	SST
Bottom plug	316 SST

DIMENSIONS

Type B95 valve size, in. (mm)	Dimensions, in. (mm)		
	A	B	C
½ (15)	5.04 (128)	5.59 (142)	1.58 (40.1)
¾ (20)	5.80 (147)	5.71 (145)	1.46 (37.1)
1 (25)	6.60 (168)	6.71 (170)	1.62 (41.2)

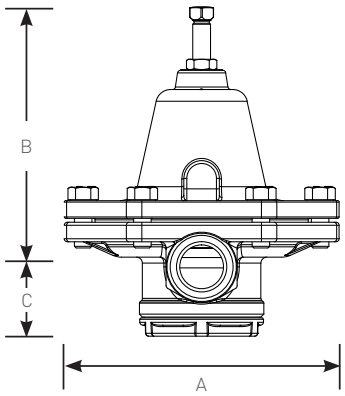

TYPE B95 SELECTION GUIDE

Example:	B95	D	C	W	S	S	B	B	S	01	-	D	1

Model
B95 B95 valve

Material of construction
D Carbon steel body and chamber
G 316 SST body and chamber

Valve size
C ½ in. (15)
D ¾ in. (20)
E 1 in. (25)

Service
W Water/air
S Steam

Body style/connection style
S Side inlet/side outlet - straight thru w/ NPT connections

Spring chamber style
S Standard
K w/ Pressure screw cap and differential connection

Diaphragm material
B NBR (water/air)
G 316 SST (steam)

Seat material
B NBR (water/air)
T PTFE (steam)

Pressure screw style
S Standard

Variation
01 Standard

Design revision
(-) Indicates original design

Spring material
D Steel
E SST

Spring range
Refer to table on page 11

NOTE

1. Steel springs are furnished as standard. Stainless springs furnished for higher ranges and for all cryogenic valves.
2. Stainless steel valves available with 200-400 psig range. Consult factory.
3. For steam service, we recommend a max. differential pressure of 150 psig to prevent seat erosion.

If downstream pressure control is critical to the safety of the installation, then the downstream side should be protected by a safety relief valve set to relieve at the maximum safe limit, but at least 10 psig higher than the pressure regulator's delivery setting.

TYPE BBC: HEAVY OIL OR VISCOUS FLUIDS

Model overview

Type BBC is available in ⅜ through 1½ in. (10 to 40 mm) sizes with either a cast iron or bronze body. These valves are suited to systems with a maximum operating temperature of 180°F (82°C) when fitted with an NBR or FKM[1] diaphragm and a maximum operating temperature of 400°F (204°C) with a Monel® metal diaphragm. A stainless steel piston and seat are standard.

Depending on the setting of the adjusting spring installed, delivery pressures may be adjusted from a minimum of 2 psig (0.14 barg) to a maximum of 200 psig (13.8 barg).

Valves will normally be equipped as indicated in the table but other combinations of body material, piston-cylinder and diaphragm are available to special order.

The Type BBC incorporates a radical departure from the conventional regulator valve design, featuring a 'universal joint' type seating arrangement which ensures free valve operation. This design ensures that there are no small ports or close tolerances which would prevent dependable performance. The working parts are accessible easily without removing the valve from the line. The standard regulator is fitted with a square head adjusting screw and lock nut arrangement. A T-handle or handwheel may also be fitted for a small additional charge.

Application

The Type BBC is designed for heavy oil service (Bunker C and other grades) as well as for dirty liquids or fluids with a high viscosity.

NOTE

If downstream pressure control is critical to the safety of the installation, the downstream side should be protected by a safety relief valve set to relieve at the maximum safe limit, but at least 10 psig (0.69 barg) higher than the pressure regulator's delivery setting.

Specifications

Capacity information: For specific capacity information, consult the factory giving the pressure conditions that apply to your system.

Service	Maximum initial pressure, psig (bar)	Maximum reduced pressure, psig (barg)	Body material		Piston and seat	Diaphragm material			Maximum operating temperature, °F (°C)
			Iron	Bronze	SST	NBR	Monel®	FKM[1]	
Heavy Oil	200 (13.8)	150 (10.3)	X		X	X		X	180 (82)
	400 (27.6)	200 (13.8)		X	X	X		X	180 (82)
	150 (10.3)	125 (8.6)	X		X		X		400 (204)
	250 (17.2)	200 (13.8)		X	X		X		400 (204)

1. Not UL approved.

Monel® is a mark owned by Special Metals Corporation Group

STANDARD SPRING RANGES, psig (barg)

Spring Material	Size, in. (mm)	1	2	3	4	5	6
Steel	⅜ (10)	2 to 15 (0.1 to 1.0)	10 to 50 (0.7 to 3.4)	40 to 80 (2.8 to 5.5)	75 to 150 (5.2 to 10.3)	125 to 200 (8.6 to 13.8)	- - - -
	½ (15)	2 to 35 (0.1 to 2.4)	20 to 50 (1.4 to 3.4)	40 to 120 (2.8 to 8.3)	100 to 200 (6.9 to 13.8)	- - - -	- - - -
	¾ (20)	2 to 15 (0.1 to 1.0)	10 to 30 (0.7 to 2.1)	20 to 75 (1.4 to 5.2)	60 to 125 (4.1 to 8.6)	100 to 200 (6.9 to 13.8)	- - - -
	1 (25)	2 to 15 (0.1 to 1.0)	10 to 40 (0.7 to 2.8)	30 to 60 (2.1 to 4.1)	50 to 100 (3.4 to 6.9)	90 to 150 (6.2 to 10.3)	125 to 200 (8.6 to 13.8)
	1¼, 1½ (32, 40)	2 to 20 (0.1 to 1.4)	10 to 30 (0.7 to 2.1)	20 to 100 (1.4 to 6.9)	90 to 150 (6.2 to 10.3)	100 to 175 (6.9 to 12.1)	100 to 200 (6.9 to 13.8)

MATERIALS OF CONSTRUCTION

Part description	Materials
Adjusting spring	Steel
Spring housing	Cast iron or bronze
Pressure plate	Cast iron
Diaphragm	NBR or Monel®
Diaphragm gasket (for metal diaphragms only)	Aramid fiber
Body	Cast iron or bronze
Pusher post seat	Brass
Body seat	303 Stainless steel
Bottom plug gasket	Aramid fiber
Piston	303 Stainless steel
Pusher post	Monel®
Piston spring	Monel®

DIMENSIONS

Type BBC valve size, in. (mm)	Dimensions, in. (mm)			Shipping weight, lbs (kg)	
	A	B	C	Iron	Bronze
⅜ (10)	3.88 (98.4)	4.50 (114)	1.75 (44.5)	5 (2.3)	5½ (2.3)
½ (15)	4.47 (114)	5.13 (130)	2.48 (62.9)	7½ (3.4)	8 (3.6)
¾ (20)	5.13 (130)	4.63 (118)	1.88 (47.6)	9 (4.1)	10 (4.5)
1 (25)	5.81 (148)	6.25 (159)	2.13 (54.0)	12 (5.4)	16 (7.3)
1¼ (32)	6.19 (157)	6.13 (156)	2.63 (66.7)	18 (8.2)	20 (9.1)
1½ (40)	6.19 (157)	6.13 (156)	2.63 (66.7)	18 (8.2)	20 (9.1)

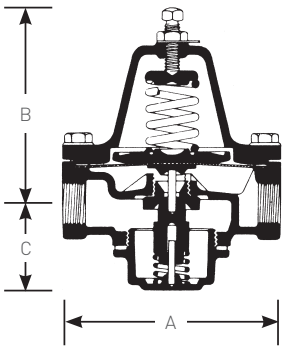

TYPE BBC SELECTION GUIDE

Example:	BBC	F	B	W	S	S	B	E	S	01	A	D	1

Model

BBC BBC valve

Material of construction

Z Bronze

F Iron

Valve size

B ⅜ in. (10 mm) **E** 1 in. (25 mm)

C ½ in. (15 mm) **F** 1¼ in. (32 mm)

D ¾ in. (20 mm) **G** 1½ in. (40 mm)

Service

O Oil

Body style/connection style

S Side inlet/side outlet - straight thru w/ NPT connections

B Side inlet/side outlet - straight thru w/ BSPT connections

Spring chamber style

S Standard

Diaphragm material

B NBR (oil up to 180°F)

M Monel® (oil 180 to 400°F)

V FKM (oil up to 180°F, not UL approved)

Seat material

E 303 Stainless steel

Pressure screw style

S Standard

T T-handle

Variation

01 Standard

Design revision

A Indicates 2nd design revision

Spring material

D Steel

Set pressure

Refer to table on page 14

Monel® is a mark owned by Special Metals Corporation Group

CASH VALVE™ A SERIES PRESSURE REGULATORS

Single seated and self-actuating compact diaphragm-type regulators covering a wide range of designs and operating pressures

FEATURES

- Reduce high inlet pressures to lower outlet pressures within close limits.
- All brass bodies with inbuilt strainer.
- Easily renewable disc-piston assembly.
- Screwed-in cylinder body seat provides for easy removal.
- Self contained strainer protects working parts.
- Types A-360 and A-361 incorporate an aspirating action to give exceptional regulation at high flow rates.
- Fillister or hex head adjusting screws standard; T-bar handle, handwheel or tamper-proof seal caps available.
- Balanced piston design either standard or optional depending on model.

GENERAL APPLICATION

A Series regulators are suitable for a variety of applications with water, air, oil, gases or other non-corrosive fluids as may be recommended for a specific design. They are not suitable for steam service.

TECHNICAL DATA[1]

Material:	Brass
Sizes:	⅛ to ½ in. (6 to 15 mm)
Connections:	Threaded NPTF
Body styles:	2, 3 or 4-way
Inlet pressure range:	250 to 1100 psi (17.2 to 76 bar)
Reduced pressure range:	0 to 400 psi (0 to 27.6 bar)
Temperature range:	-40 to 180°F (-40 to +82°C)

1. Refer to General Specifications Table in page 2 for more information.

© 2017 Emerson. All Rights Reserved.

MODELS OVERVIEW

TYPE A-31

A-16

- Sizes: ¼ or ⅜ in. (8 or 10 mm)
- Body styles:
- Two-way valve with one female inlet and opposite female outlet.
- Three-way valve with one female inlet and opposite female outlet plus a left-hand side ¼ or ⅜ NPT (8 or 10 mm) gauge connection[1].

A-31 and A-31S

- Sizes: ⅛, ¼ or ⅜ in. (6, 8 or 10 mm)
- Body styles:
- Type A-31: two-way valve with one female inlet and opposite female outlet.
- Type A-31S: three-way valve with one female inlet and opposite female outlet plus either a left or right-hand side ⅛, ¼ or ⅜ NPT (6, 8 or 10 mm) gauge connection[1].

TYPE A-360, 365

TYPE A-361

A-360, A-361 and A-365

- Sizes: ¼, ⅜ or ½ in. (8, 10 or 15 mm)
- Body styles:
- Types A-360 and A-365 - two-way valve with one female inlet and opposite female outlet.
- Type A-361 - adaptable for three-way or four-way use.

NOTE

1. Gauge connection designation is in relation to main valve inlet with valve in upright position.

TYPE A-16 (two-way)

Operation

All A Series pressure regulators are supplied with the requested delivery pressure pre-adjusted at the factory. Pressure adjustment is accomplished by turning the adjusting screw either clockwise to increase delivery pressure or counter-clockwise to reduce delivery pressure. For example, turning the adjusting screw clockwise forces the adjusting spring to act against the diaphragm assembly and move the internal valve seat to the open position.

When high inlet pressure is applied, it flows into the regulator, through the open seat, up under the diaphragm and on through the outlet. As the outlet pressure builds up under the diaphragm to the adjusted psi setting, the downward adjusting spring pressure is overcome and the regulating valve seat closes to maintain the required delivery pressure.

GENERAL SPECIFICATIONS

Product	Body Material	Spring Chamber Material	Service	Body Size, in. (mm)	Materials: Diaphragm	Materials: Seat (Disc)	Maximum Inlet Pressure, psi (bar)	Maximum Outlet Pressure, psi (bar)	Temperature Range, °F (°C)
A-16	Brass	Aluminum	Water/Air	¼ or ⅜ (8 or 10)	Nitrile (NBR)	NBR	250 (17.2)	180 (12.4)	-40 to 180 (-40 to 82)
A-31	Brass	Brass or Aluminum	Water/Air	⅛, ¼ or ⅜ (6, 8 or 10)	NBR, Neoprene or EPR	NBR	300 (20.7)	250 (17.2)	-40 to 180 (-40 to 82)
						PTFE	300 (20.7)	250 (17.2)	-40 to 180 (-40 to 82)
						FKM	300 (20.7)	250 (17.2)	-40 to 180 (-40 to 82)
A-31S	Brass	Aluminum	Water/Air	⅛, ¼ or ⅜ (6, 8 or 10)	NBR, Neoprene or EPR	NBR	300 (20.7)	250 (17.2)	-40 to 180 (-40 to 82)
						PTFE	300 (20.7)	250 (17.2)	-40 to 180 (-40 to 82)
						FKM	300 (20.7)	250 (17.2)	-40 to 180 (-40 to 82)
A-31VR	Brass	Brass	Vacuum	¼ (8)	EPR or EPR with PTFE Liner	Silicone	- - - -	- - - -	-40 to 180 (-40 to 82)
						FFKM	- - - -	- - - -	-40 to 180 (-40 to 82)
A-360 A-361	Brass	Brass	Water/Air	¼, ⅜ or ½ (8, 10 or 15)	NBR, FKM, Neoprene or Bronze	NBR	400 (27.6)	250 (17.2)	-40 to 180 (-40 to 82)
						PTFE	400 (27.6)	250 (17.2)	-40 to 180 (-40 to 82)
						FKM	400 (27.6)	250 (17.2)	-40 to 180 (-40 to 82)
						Neoprene	400 (27.6)	250 (17.2)	-40 to 180 (-40 to 82)
						EPDM	400 (27.6)	250 (17.2)	-40 to 180 (-40 to 82)
A-365	Brass	Brass	Water/Air	¼ or ⅜ (8 or 10)	NBR, FKM, Neoprene, EPDM or Bronze	NBR	1100 (75.9)	400 (27.6)	-40 to 180 (-40 to 82)
						PTFE	1100 (75.9)	400 (27.6)	-40 to 180 (-40 to 82)
						FKM	1100 (75.9)	400 (27.6)	-40 to 180 (-40 to 82)
						Neoprene	1100 (75.9)	400 (27.6)	-40 to 180 (-40 to 82)
						EPDM	1100 (75.9)	400 (27.6)	-40 to 180 (-40 to 82)

A-16 MODERATE REGULATION LOW TO MEDIUM CAPACITY

Application

Type A-16 Regulators are suitable for air, water, oil, fluids and gas applications and are intended for use on equipment requiring moderate regulation, low to medium capacity and installations where space limitations and flexibility of hook-up are important factors. They are designed for initial pressures up to 250 psi (17.2 bar) and delivery pressures ranging from 2 to 180 psi (0.14 to 12.4 bar) depending on the spring used. The maximum operation temperature is 180°F (82°C).

The Type A-16 Regulator is suitable for use in drinking fountains, bubblers, water coolers, humidifiers, beverage dispensers, spray paint rigs, air tools, etc.

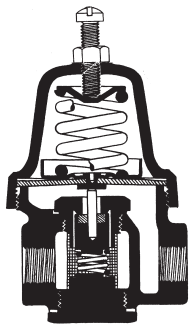

TYPE A-16 (TWO-WAY) INTERIOR

SPECIFICATIONS

	Description				Maximum		
	Size, in. (mm)		Body style		inlet pressure,	Adjustable range,	Temperature Range,
Type	¼ (8)	⅜ (10)	2-way	3-way	psi (bar)	psi (bar)	°F (°C)
A-16	X	X	X	X	250 (17.2)	2 to 180 (0.14 to 12.4)	-40 to 180 (-40 to 82)

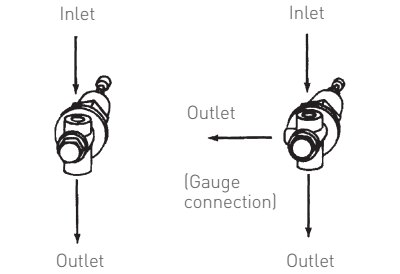

Style 1 (two-way) Style 2 (three-way)

BODY STYLES

MATERIALS OF CONSTRUCTION

Part description	Materials
Body	Brass
Spring chamber	Aluminum
Spring button	Brass
Pressure Spring	Steel
Diaphragm	NBR
Pressure plate	Brass
Pusher post button	Brass
Cylinder	Brass
Piston	Brass
Seat disc	NBR
Piston spring	Stainless steel
Strainer screen	Brass

DIMENSIONS

Description		Dimensions, in. (mm)			Shipping
Size, in. (mm)	Style	A	B	C	weight, lbs (kg)
¼ or ⅜ (8 or 10)	2-way, 3-way	2.25 (57.2)	3.50 (88.9)	0.81 (20.6)	1¾ (0.79)

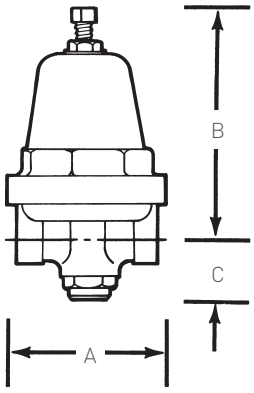

TYPE A-16 (TWO-WAY)

CAPACITY INFORMATION

		Water (GPM)			Air (SCFM)		
Inlet - psig	Outlet - psig	A-31/A-16	A-360 ¼ in. (8 mm)	A-360 ½ in. (10 mm)	A-31/A-16	A-360 ¼ in. (8 mm)	A-360 ½ in. (10 mm)
25	15	1.2	1.5	2.0	8	13	17
50	40	1.2	1.5	2.0	8	13	17
	25	1.4	2.2	2.5	11	21	25
75	50	2.7	3.0	5.5	20	25	45
	25	3.0	3.5	3.5	14	27	32
100	75	2.8	3.0	5.7	28	25	48
	50	3.0	3.6	9.0	25	30	60
	25	3.0	3.6	3.5	25	35	41
125	100	2.8	3.0	5.7	28	25	45
	75	3.7	4.0	7.0	34	35	62
	50	3.2	4.0	5.2	34	40	78
150	100	3.7	4.0	7.0	34	35	62
	75	3.7	4.5	8.5	34	40	78
	50	3.2	4.8	10.5	27	45	95
	25	1.8	4.8	10.5	27	45	95
200	150	4.4	4.4	7.5	47	45	85
	100	4.2	4.5	10.0	38	45	95
	75	4.2	5.0	13.5	38	45	95
	50	4.2	5.0	13.5	38	45	95
300	150	4.7	5.0	13.5	54	45	110
	100	4.7	5.0	13.5	54	45	95
	50	4.7	5.0	13.5	54	45	95

NOTES

1. The capacity information in this table is for general application use representing average conditions. Where capacities and sizing are critical, consult your sales representative.
2. Types A-31 and A-16 provide the same capacity.
3. Capacity for ¼ and ⅜ in. (8 and 10 mm) Type A-360 same for Types A-361 and A-365.
4. Capacity for ½ in. (15 mm) Type A-360 same as Type A-361.
5. Capacities are based upon a 20% droop.
6. To obtain capacities for regulators using metal diaphragms, multiply the table values by 0.7

TYPES A-31, A-31S: COMPACT AND ECONOMICAL REGULATORS

Application

Types A-31 and A-31S pressure regulating valves are designed for installations in systems with initial pressures up to 300 psi (20.7 bar) and where space and cost limitations are important. The standard adjustment range is from 2 to 250 psi (0.14 to 17.2 bar) and the maximum operating temperature is 180°F (82°C). For higher temperature installations consult your sales representative.

These regulators are for use on water and air, suitable for drinking fountains, bubblers, water coolers, humidifiers, beer pumps, beverage dispensers, spray paint outfits, air tools, etc. They are also suitable for other liquids and gases if recommended by the factory; for specific advice, please write giving full details of your requirements.

Sizes

Types A-31 and A-31S are available in ⅛, ¼ and ⅜ in. (6, 8 and 10 mm) sizes and in various optional body styles.

Body styles

Type A-31: Two-way valve with one female inlet and opposite female outlet.
Type A-31S: Three-way valve with one female inlet and opposite female outlet plus either a left or right-hand side ⅛, ¼ or ⅜ NPT (6, 8 or 10 mm) gauge connection. Specify gauge connection required when ordering.

NOTE

Gauge connection designations are in relation to main valve inlet with valve in the upright position.

Optional balanced piston

The Type A-31 regulator can be furnished with a balanced piston construction for a small extra charge. This design is particularly effective in keeping the delivery pressure near constant when there are wide fluctuations in the inlet pressure.

Pressure adjusting screws

Type A-31 and A-31S pressure regulators are fitted with an adjusting screw and hex lock nut as standard. They can also be supplied with either a T-handle or black plastic handwheel with wing lock nut arrangement at a small extra charge. The handwheels are particularly suited for panel mounted installations both for improved appearance as well as ease of making pressure adjustments.

Mounting accessories

These regulators can be equipped with a special bushing and nut for panel mounting.

Special designs

Various modifications of the Type A-31 pressure regulating valve are available to meet specific applications.

TYPE A-31

PRESSURE ADJUSTING SCREWS

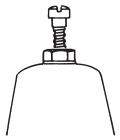

Adjusting screw

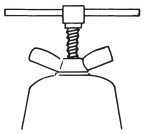

T-Handle

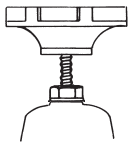

Handwheel (A31 only)

MOUNTING ACCESSORIES

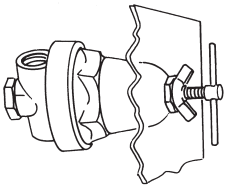

Type A-31 (with bushing for panel mounting, T-handle or with handwheel)

SPECIFICATIONS

Type	Description					Maximum inlet pressure, psi (bar)	Adjustable range, psi (bar)	Temperature Range, °F (°C)
	Size, in. (mm)			Body style				
	⅛ (6)	¼ (8)	⅜ (10)	2-way	3-way			
A-31[1]	X	X	X	X		300 (20.7)	2 to 180 (0.14 to 12.4)	-40 to 180 (-40 to 82)
A-31S[1]	X	X	X		X	300 (20.7)	2 to 180 (0.14 to 12.4)	-40 to 180 (-40 to 82)

1. With Balanced Piston design option.

MATERIALS OF CONSTRUCTION

Part description	Materials
Body	Brass
Spring chamber	Brass or aluminum
Spring button	Brass
Pressure Spring	Steel or stainless steel
Diaphragm gasket	Brass
Diaphragm	NBR, Neoprene, Ethylene Propylene Rubber (EPR)
Pressure plate	Brass
Piston	Brass
Seat disc	NBR, Polytetrafluoroethylene (PTFE), Fluorocarbon (FKM)
Piston spring	Stainless steel

DIMENSIONS

Type	Dimensions, in. (mm)			Shipping weight, lbs (kg)
	A	B	C	
A31, A31S	2.30 (58.3)	3.29 (83.5)	0.59 (15.1)	1¼ (0.57)
A31, A31S balanced piston	2.30 (58.3)	3.29 (83.5)	0.84 (21.3)	1⅜ (0.62)

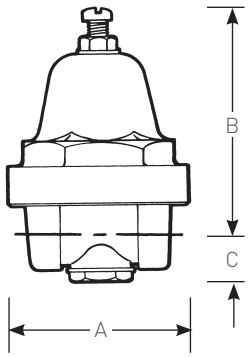

TYPE A-31

STANDARD SPRING RANGES, psig (bar)

Spring Material	Type	1	2	3	4	5	6	7
Steel	A16	2 to 30 (0.14 to 2.1)	10 to 50 (0.69 to 3.4)	25 to 90 (1.7 to 6.2)	80 to 120 (5.5 to 8.3)	100 to 180 (6.9 to 12.4)	- - - -	- - - -
	A31, A31S	2 to 30 (0.14 to 2.1)	10 to 50 (0.69 to 3.4)	30 to 90 (2.1 to 6.2)	80 to 120 (5.5 to 8.3)	100 to 180 (6.9 to 12.4)	- - - -	- - - -
	A31VR (in. Hg)	0 to 15 (0 to 0.5)	10 to 30 (0.34 to 1.0)	- - - -	- - - -	- - - -	- - - -	- - - -
SST	A31	2 to 15 (0.14 to 1.0)	2 to 25 (0.14 to 1.7)	15 to 65 (1.0 to 4.5)	40 to 100 (2.8 to 6.9)	50 to 150 (3.4 to 10.3)	75 to 175 (5.2 to 12.1)	100 to 250 (6.9 to 17.2)
	A31S	2 to 15 (0.14 to 1.0)	- - - -	- - - -	- - - -	- - - -	- - - -	- - - -

A16, A31, A31S, A31VR SELECTION GUIDE

Example:	A16	-	A	W	S	A	S	B	B	F	02	-	D	1

Model
- **A16** Type A16
- **A31** Type A31
- **A31S** Type A31S
- **A31V** Type A31VR

Size
- **Y** ⅛ in. (6 mm) (Types A31, A31S)
- **A** ¼ in. (8 mm) (Types A16, A31, A31S, A31VR)
- **B** ⅜ in. (10 mm) (Types A16, A31, A31S)

Service
- **W** Water/air
- **V** Vacuum service (Type A31VR only)

Body/connection style
- **S** Side inlet/side outlet - straight thru (Types A16, A31)
- **R** Side inlet/side outlet - straight thru w/ right side gauge port (Type A31S only)
- **L** Side inlet/side outlet - straight thru w/ left side gauge port (Types A16, A31S)
- **B** Side inlet/bottom outlet w/ straight thru gauge connection (Type A31VR only)

Spring chamber material
- **A** Aluminum spring chamber (Types A16, A31, A31S)
- **Z** Brass spring chamber (Types A31, A32, A31VR)

Spring chamber style
- **S** Standard
- **N** Non-vented
- **P** Panel mount

Diaphragm material
- **B** NBR (Types A16, A31, A31S)
- **L** NBR w/ PTFE liner (Types A31, A31S)
- **N** Neoprene (Types A31, A31S)
- **T** Neoprene w/ PTFE liner (Types A31, A31S)
- **R** EPR (Types A31, A31S, A31VR)
- **F** EPR w/ PTFE liner (Types A31, A31S, A31VR)

Seat material
- **B** NBR (Types A16, A31, A31S)
- **T** PTFE (Types A31, A31S)
- **V** FKM (Types A31, A31S)
- **S** Silicone (Type A31VR only)
- **K** Perfluoroelastomer (FFKM) (Type A31VR only)

Pressure screw style
- **F** Fillister (Types A16, A31, A31S)
- **T** T-handle (Types A31, A31S)
- **H** Hex (Types A31, A31S)
- **K** Knurled (Type A31VR only)
- **W** Handwheel steel+plastic (Types A31, A31S)

Variation
- **01** Standard
- **02** Balanced piston (Types A31, A31S)
- **11** Standard variation w/ inlet screen (Type A31 only)
- **12** Balanced piston w/ inlet screen (Type A31 only)

Design revision
- **(-)** Original design

Spring material
- **D** Steel (Industrial or final line gas service only)
- **E** Stainless steel

Spring range

Refer to table above

TYPES A-360, A-361 AND A-365: ACCURATE REGULATION MEDIUM AND HIGH CAPACITY

Application

Types A-360, A-361 and A-365 pressure reducing regulating valves incorporate an aspirating action to give accurate regulation at high flow rates. Extreme fluctuations in the upstream or inlet pressure have little or no effect on the delivery or outlet pressure due to the balanced design. They are recommended for air, oils, water, gases and all non-corrosive fluids and are not for steam service. The maximum system operating temperature must not exceed 180°F (82°C).

TYPE A-360, 365

TYPE A-361

Types A-360, A-361 and A-365 regulators are recommended for any installation requiring more flow and finer regulator control than the small ordinary regulator can provide. They may be operated in any position, horizontal or vertical.

Sizes

Types A-360 and A-361 are designed for systems with a maximum inlet pressure of 400 psi (27.6 bar) and allow delivery pressures to be adjusted from 0 to 250 psi (0 to 17.2 bar) depending on the spring used. They are available in ¼, ⅜ and ½ in. (8, 10 and 15 mm) sizes.

Type A-365 is designed for a maximum inlet pressure of 1100 psi (76 bar), while allowing for delivery pressures to be adjusted from 0 to 400 psi (0 to 27.6 bar). It is available in ¼ and ⅜ in. (8 and 10 mm) sizes only.

SPECIFICATIONS

Type	Description					Maximum inlet pressure, psi (bar)	Adjustable range, psi (bar)	Temperature Range,°F (°C)
	Size, in. (mm)			Body style				
	¼ (8)	⅜ (10)	½ (15)	2-way	3-[1] or 4-way			
A-360	X	X	X	X		400 (27.6)	0 to 250 (0 to 17.2)	-40 to 180 (-40 to 82)
A-361	X[2]	X	X		X	400 (27.6)	0 to 250 (0 to 17.2)	-40 to 180 (-40 to 82)
A-365	X	X		X		1100 (75.9)	0 to 400 (0 to 27.6)	-40 to 180 (-40 to 82)

1. ¼ NPT pipe plug fitted for three-way applications
2. ¼ in. (8 mm) Type A-361 adjustable range can go up to 400 psi (27.6 bar)

TYPES A-360, A-361 AND A-365

Operation

Types A-360, A-361 and A-365 regulators produce maximum sensitivity to changes in demand or rate of flow, by the combination of long, responsive springs (see A) and a body port (B) past which fluid flowing at a higher velocity creates a suction or aspirating action. This materially reduces pressure in the chamber below the diaphragm (C), permitting wider valve opening resulting in higher capacity and closer regulation.

Type A-360 valves have a balanced internal piston design (D) to ensure stability of outlet pressure control despite widely varying inlet pressure conditions. An upper piston O-ring seal (E) is used to isolate the inlet pressure from the control chamber below the diaphragm and may be renewed easily from the top side by removing the O-ring retainer (two screws). All other operating parts below the diaphragm are accessible easily and removable readily through the bottom cap, which also employs an O-ring seal to preclude any leakage.

The renewable valve seat disc is of a high quality composition to provide tight closure as long as the seat is clean and free from damage. Closure against the inlet pressure ensures smooth, quiet performance.

Accurate regulation

The balanced piston design maintains a near constant delivery pressure when there are wide fluctuations in the inlet pressure.

Body styles

Types A-360 and A-365 - Two-way valve with one female inlet and opposite female outlet.
Type A-361 - Adaptable for three-way or four-way use. The design incorporates one female inlet and opposite female outlet plus one left and one right-hand side ¼ NPT (8 mm) gauge connection. One ¼ NPT (8 mm) plug is furnished to convert from four-way to three-way use. The four-way design permits installation with either one inlet and three outlets or two inlets and two outlets, to provide for all combinations of gauging upstream or downstream pressures.

Pressure adjusting screws

The valves are fitted with an adjusting screw and lock nut as standard.
They may also be fitted with an optional tamper proof cap, a T-handle or a black plastic handwheel with lock nut.

Panel mounting

All versions may be equipped with a special bushing and wing nut to mount the valve securely to a control panel.

Replaceable seat disc, O-rings, diaphragm and piston

Simplicity of design means minimal, easy and low-cost maintenance with few integral parts required.

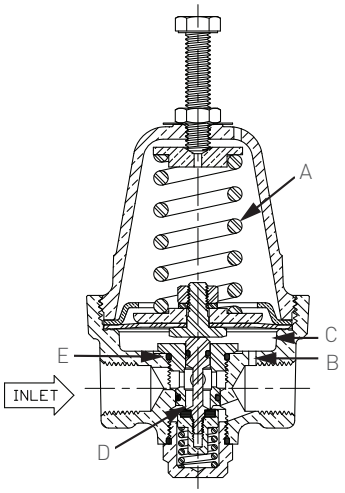

TYPE A-360, A-361 INTERIOR

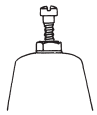

Adjusting screw

Tamper proof cap

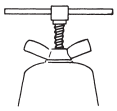

T-handle (A360 only)

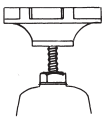

Handwheel (361 only)

OPTIONS
MOUNTING ACCESSORIES

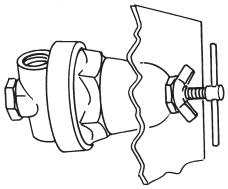

Type A-31 (with bushing for panel mounting, T-handle or with handwheel)

Style 1
(two-way)

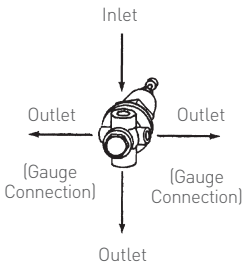

Right hand outlet and left hand outlet gauge connections

Style 2
(three-way or four-way)

BODY STYLES

MATERIALS OF CONSTRUCTION

Part description	Materials
Body	Brass
Spring chamber	Brass
Adjusting spring	Stainless steel
Diaphragm stop	Brass
Pressure plate	Brass
Diaphragm	NBR, Neoprene, EPR, FKM, Bronze
Pusher post button	Brass
Retainer plate[1]	Brass
Cylinder[2]	Stainless steel
Pusher post	Stainless steel
Seat disc	NBR, FKM, PTFE, Neoprene, EPR
Piston	Brass
Piston spring	Stainless steel
O-rings	NBR, FKM, Neoprene, EPR

1. Not available on Type A-365.

2. Available for Type A-365 only.

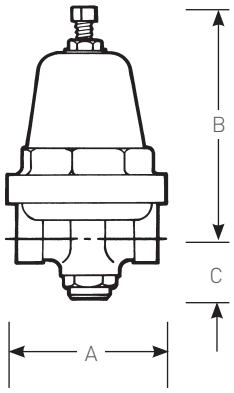

TYPE A-360, A-361, A-365

DIMENSIONS

Type	Description					Dimensions, in. (mm)			Shipping weight, lbs (kg)
	Size, in. (mm)			Body style					
	¼ (8)	⅜ (10)	½ (15)	2-way	3- or 4-way	A	B	C	
A-360	X			X		2.44 (62.0)	4.00 (102)	1.13 (28.6)	2 (0.91)
		X		X		2.44 (62.0)	4.00 (102)	1.13 (28.6)	2 (0.91)
			X	X		2.58 (65.5)	4.79 (122)	1.13 (28.6)	2½ (1.13)
A-361	X				X	2.44 (62.0)	4.00 (102)	1.13 (28.6)	2⅛ (0.96)
		X			X	2.44 (62.0)	4.50 (114)	1.13 (28.6)	2⅛ (0.96)
			X		X	2.88 (73.0)	4.50 (114)	1.63 (41.3)	2⅝ (1.19)
A-365	X			X		2.81 (71.3)	4.69 (119)	1.12 (28.6)	2 (0.91)
		X		X		2.81 (71.3)	4.69 (119)	1.12 (28.6)	2 (0.91)

STANDARD SPRING RANGES, psig (bar)

Spring Material	Type	Size, in. (mm)	1	2	3	4	5	6	7
SST	A360, A361	¼, ⅜ (8, 10)	0 to 5 (0 to 0.34)	2 to 35 (0.14 to 2.4)	20 to 70 (1.4 to 4.8)	60 to 125 (4.1 to 8.6)	75 to 200 (5.2 to 13.8)	100 to 250 (6.9 to 17.2)	- - - -
	A360, A361	½ (15)	0 to 5 (0 to 0.34)	2 to 25 (0.14 to 1.7)	20 to 60 (1.4 to 4.1)	40 to 80 (2.8 to 5.5)	75 to 125 (5.2 to 8.6)	100 to 250 (6.9 to 17.2)	- - - -
	A365	¼, ⅜ (8, 10)	0 to 40 (0 to 2.8)	40 to 80 (2.8 to 5.5)	25 to 150 (1.7 to 10.3)	100 to 200 (6.9 to 13.8)	200 to 250 (13.8 to 17.2)	200 to 400 (13.8 to 27.6)	- - - -

A360, A361, A365 SELECTION GUIDE

Example:	A360	A	W	S	Z	S	B	B	S	01	-	D	1

Model
- **A360** Type A360
- **A361** Type A361
- **A365** Type A365

Size
- **A** ¼ in. (8 mm)
- **B** ⅜ in. (10 mm)
- **C** ½ in. (15 mm) (Types A360, A361)

Service
- **W** Water/air

Body/connection style
- **S** Side inlet / side outlet - straight thru (Types A360, A365)
- **X** Side inlet / side outlet - straight thru w/ two ¼ NPT gauge ports (Type A361 only)

Spring chamber material
- **Z** Brass spring chamber

Spring chamber style
- **S** Standard
- **P** Panel mount
- **D** Differential connection and adjusting screw cap
- **C** Adjusting screw cap

Diaphragm material
- **B** NBR
- **L** NBR w/ PTFE liner
- **N** Neoprene
- **T** Neoprene w/ PTFE liner
- **Z** Bronze
- **V** FKM
- **E** EPDM

Seat material
- **B** NBR
- **T** PTFE
- **V** FKM
- **N** Neoprene
- **E** EPDM

Pressure screw style
- **S** Standard
- **T** T-handle
- **H** Hex

Variation
- **01** Standard

Design revision
- **(-)** Original design

Spring material
- **E** Stainless steel

Spring range
Refer to table above

NOTE

NPTF, also referred to as 'Dryseal' thread, is designed to provide a more leak-free seal without the use of PTFE tape or other sealant compound. NPTF threads are interchangeable with NPT threads and are standard on all Cash Valve products.

CASH VALVE™ E-55 SERIES PRESSURE REGULATORS

Pressure regulators for water and air services designed for high capacity, variable flow rates and accurate regulation

FEATURES

- Handles high and variable flow rates well beyond the limitations of ordinary regulators.
- Aspirated design for close pressure control.
- Balanced piston design provides sensitive operation, close regulation over wide fluctuations in inlet pressure and assures quiet performance.
- Simple design for easy maintenance and repair.
- Built-in strainer screen protects working parts and is easily cleaned.
- Optional construction for cryogenic service.

GENERAL APPLICATION

Suitable for service on air, water, oil, gases (except steam) and fluids not corrosive to bronze. It is particularly suitable for all types of water systems and various hydraulic and pneumatic systems that require exceptional accuracy.

TECHNICAL DATA[1]

Materials:	Bronze
Sizes:	½ to 2 in. (15 to 50 mm)
Connections:	NPTF, BSPT
Maximum inlet pressure:	400 psig (27.6 barg)
Reduced pressure range:	10 to 300 psig (0.69 to 20.7 barg)
Temperature Range:	-20 to 180°F (-29 to 82°C)

1. Refer to General Specifications Table in page 2 for more information.

© 2017 Emerson. All Rights Reserved.

GENERAL SPECIFICATIONS

Product	Body Material	Spring Chamber Material	Service	Body Size, in. (mm)	Materials: Diaphragm	Materials: Seat (Disc)	Maximum Inlet Pressure, psi (bar)	Maximum Outlet Pressure, psi (bar)	Temperature Range, °F (°C)
E-55	Bronze	Bronze	Water/Air	½ to 1 (15 to 25)	NBR	NBR	400 (27.6)	250 (17.2)	-20 to 180 (-29 to 82)
	Bronze	Bronze	Water/Air	1 ¼ to 2 (32 to 50)	NBR	NBR	400 (27.6)	300 (20.7)	-20 to 180 (-29 to 82)

STANDARD SPRING RANGES, psig (barg)

Spring Material	Size, in. (mm)	1	2	3	4	5
Steel	½, ¾, 1 (15, 20, 25)	15 to 50 (1.0 to 3.4)	25 to 80 (1.7 to 5.5)	50 to 110 (3.4 to 7.6)	75 to 195 (5.2 to 13.4)	100 to 250 (6.9 to 17.2)
	1 ¼, 1 ½, 2 (32, 40, 50)	15 to 25 (1.0 to 1.7)	20 to 50 (1.4 to 3.4)	40 to 100 (2.8 to 6.9)	75 to 150 (5.2 to 10.3)	- - - -
SST	½, ¾, 1 (15, 20, 25)	10 to 35 (0.69 to 2.4)	20 to 75 (1.4 to 5.2)	75 to 125 (5.2 to 8.6)	125 to 175 (8.6 to 12.1)	75 to 250 (5.2 to 17.2)
	1 ¼, 1 ½, 2 (32, 40, 50)	20 to 70 (0.69 to 4.8)	50 to 150 (3.4 to 10.3)	75 to 175 (5.2 to 12.1)	75 to 200 (5.2 to 13.8)	150 to 300 (10.3 to 20.7)

MATERIALS OF CONSTRUCTION

Part description	Materials
Body	Bronze
Spring chamber	Bronze
Pressure spring	SST, Steel
Diaphragm	NBR
Body seat	SST, Monel®[1]
Seat disc	NBR
Piston	Brass
O-ring	NBR
Strainer screen	Monel®
Bottom plug	Bronze

1. Available for ½ to 1 in. (15 to 25 mm) body size only.

DIMENSIONS

Size, in. (mm)	Dimensions, in. (mm): A	B	C	Shipping weight, lbs (kg)
½ (15)	4.00 (102)	7.25 (184)	2.19 (55.6)	6.00 (2.72)
¾ (20)	4.00 (102)	7.25 (184)	2.19 (55.6)	6.00 (2.72)
1 (25)	4.00 (102)	7.25 (184)	2.19 (55.6)	6.00 (2.72)
1 ¼ (32)	5.50 (140)	11.96 (304)	3.19 (80.9)	17.0 (7.71)
1 ½ (40)	5.50 (140)	11.96 (304)	3.19 (80.9)	17.0 (7.71)
2 (50)	5.75 (146)	11.96 (304)	2.78 (70.6)	17.0 (7.71)

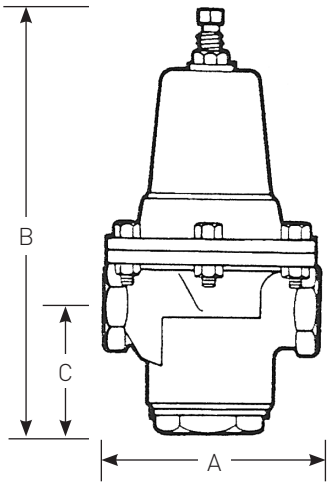

The amount of air or fluid any regulator will pass is governed by two factors: (1) pressure differential (difference between the inlet and outlet set pressure), and (2) fall-off (or droop). Outlet pressure fall-off drops slightly with increased flow (initially slight, increasing with higher flow). The rates of flow stated on the following charts are based on assumed conditions, which may be considered average for a given installation.

Monel® is a mark owned by Special Metals Corporation Group.

TYPE E-55 PRESSURE REGULATOR - WATER CAPACITY IN GPM BY SIZE

Inlet, psig (barg)	Outlet, psig (barg)	½ in. (15 mm)	¾ in. (20 mm)	1 in. (25 mm)	1 ¼ in. (32 mm)	1 ½ in. (40 mm)	2 in. (50 mm)
25 (1.7)	15 (1.0)	4	5	6	18	20	25
50 (3.4)	40 (2.8)	4	5	6	18	20	25
	25 (1.7)	9	10	11	38	40	50
75 (5.2)	50 (3.4)	12	14	15	56	62	74
	25 (1.7)	13	17	19	60	70	80
100 (6.9)	75 (5.2)	12	14	15	56	62	74
	50 (3.4)	16	20	22	73	82	94
	25 (1.7)	16	22	24	80	90	100
125 (8.6)	75 (5.2)	16	20	22	73	82	94
	50 (3.4)	17	25	28	85	95	109
	25 (1.7)	18	28	38	95	107	120
150 (10.3)	100 (6.9)	16	20	32	73	82	94
	75 (5.2)	17	25	28	85	95	109
	50 (3.4)	18	28	32	95	107	120
	25 (1.7)	18	30	35	102	115	130
200 (13.8)	150 (10.3)	16	20	22	73	82	94
	100 (6.9)	18	28	32	95	107	120
	75 (5.2)	18	30	35	102	115	130
	50 (3.4)	18	33	38	109	124	140
250 (17.2)	150 (10.3)	18	28	32	95	107	120
	100 (6.9)	18	33	38	109	124	140
	50 (3.4)	18	35	43	120	140	140
300 (20.7)	200 (13.8)	18	28	32	95	107	120
400 (27.6)	100 (6.9)	18	35	43	120	140	140
	50 (3.4)	18	35	43	120	140	140

NOTES

1. Capacities are based on a 20% fall-off.
2. To obtain capacities for regulators using metal diaphragms, multiply the table values by 0.7

TYPE E-55 PRESSURE REGULATOR - AIR CAPACITY IN SCFM BY SIZE

Inlet, psig (barg)	Outlet, psig (barg)	½ in. (15 mm)	¾ in. (20 mm)	1 in. (25 mm)	1 ¼ in. (32 mm)	1 ½ in. (40 mm)	2 in. (50 mm)
25 (1.7)	15 (1.0)	22	27	32	97	107	134
50 (3.4)	40 (2.8)	22	27	32	97	107	13
	25 (1.7)	61	68	74	257	271	338
75 (5.2)	50 (3.4)	81	95	101	379	420	500
	25 (1.7)	88	115	129	406	474	542
100 (6.9)	75 (5.2)	81	95	101	379	420	500
	50 (3.4)	108	135	149	494	555	636
	25 (1.7)	133	183	200	667	751	834
125 (8.6)	75 (5.2)	108	135	149	494	555	636
	50 (3.4)	142	208	233	709	792	909
	25 (1.7)	150	234	267	792	892	1000
150 (10.3)	100 (6.9)	108	135	149	494	555	636
	75 (5.2)	142	208	233	709	792	909
	50 (3.4)	150	234	267	792	892	1000
	25 (1.7)	150	234	267	792	892	1000
200 (13.8)	150 (10.3)	108	135	149	494	555	636
	100 (6.9)	150	234	267	792	892	1000
	75 (5.2)	168	290	335	959	1087	1223
	50 (3.4)	186	341	393	1126	1281	1446
250 (17.2)	150 (10.3)	150	234	267	792	892	1000
	100 (6.9)	186	341	393	1126	1281	1446
	50 (3.4)	206	400	492	1373	1602	1830
300 (20.7)	200 (13.8)	150	234	267	792	892	1000
400 (27.6)	100 (6.9)	206	400	492	1373	1602	1830
	50 (3.4)	206	400	492	1373	1602	1830

NOTES

1. Capacities are based on a 20% fall-off.
2. To obtain capacities for regulators using metal diaphragms, multiply the table values by 0.7

SELECTION GUIDE

Example:	E55	C	W	S	B	B	01	-	D	1

Model

E55 E-55 valve w/ bronze body and spring chamber

Valve size

C ½ in. (15 mm)
D ¾ in. (20 mm)
E 1 in. (25 mm)
F 1 ¼ in. (32 mm)
G 1 ½ in. (40 mm)
H 2 in. (50 mm)

Service

W Water/air

Body style/connection style

S Side inlet/side outlet - straight thru w/ NPT connections
B Side inlet/side outlet - straight thru w/ BSPT connections

Diaphragm material

B NBR (water/air)

Seat material

B NBR (water/air)

Variation

01 Standard
02 Without strainer screen

Design revision

(-) Indicates original design

Spring material

D Steel
E SST

Spring range

Refer to table on page 2

CASH VALVE™ TYPE G60 PRESSURE REGULATORS

A self-contained, self-actuated high capacity all purpose regulator designed to operate within close limits.

FEATURES

- Broad choice of body and internal materials for a wide range of applications.
- Wide variety of inlet pressure ranges and operating temperatures, depending on construction.
- Balanced piston design provides close control despite wide in inlet pressure variations for water, air, oil and gas services.
- Flat seal ring for excellent shut-off, high capacity and easy maintenance.
- All internal parts guided to ensure proper seating.
- Large diaphragm and long pressure spring provide for a wide range of adjustment and give exceptional sensitivity of control.
- Hex head adjusting screw and lock nut as standard. Optional T-bar available to special order.
- Optional stainless steel internal trim suitable for regulating steam, air, water, oil, gases, chemicals and other fluids.
- Optional construction for cryogenic service.

GENERAL APPLICATION

The Type G60 is designed for use with steam, water, air, oil, gases, chemicals or other fluids in dryers, steam atomized oil burners, plastic molding, cookers, degreasers and sterilizers. Also available for cryogenic service.

TECHNICAL DATA[1]

Materials:	Bronze, 316 SST, steel, iron
Sizes:	¼ to1½ in. (8 to 40 mm)
Connections:	NPTF
Maximum inlet pressure	
Water/air:	700 psig (48.3 barg)
Steam:	400 psig (27.6 barg)
Reduced pressure range:	0 to 600 psig (0 to 41.4 barg)
Temperature range[2]:	-50 to 700°F (-45 to 371°C)

1. Refer to General Specifications Table in page 3 for more information.
2. Cryogenic standard temperature range is not included.

© 2017 Emerson. All Rights Reserved.

OPERATION

The Type G60 design is totally different from the majority of self-acting pressure reducing regulators. Note the cross section below. Five pressure chambers play a part in producing its high capacity and exceptional performance.

Flow from inlet chamber (A) goes through the seat orifice to intermediate chamber (B), then into the outlet line (F) through nozzle chamber (C). Control chamber (D) communicates with outlet line (F) through chamber (E). In operation, assuming the valve closed, a drop in pressure in line (F) caused by demand downstream, drops the pressure in chambers (E) and (D) simultaneously. As this produces some valve opening, pressure in chamber (B) will elevate the velocity of flow through nozzle (C) considerably. This increased velocity through the nozzle (jet action) drops the pressure in control chamber (D). The valve is opened wide to satisfy the demand and the delivery pressure is maintained within narrow limits.

CONSTRUCTION

Body: iron, bronze, carbon steel or 316 stainless steel.
Trim: (pusher post button, pusher post orifice, nozzle, bottom cap and piston): brass or stainless steel.
Guide bushing: stainless steel.
Piston and seat ring: stainless steel - for steam and other fluids requiring metal-to-metal seats.
Brass or Monel® piston and stainless steel or Monel® seat ring - for air, cold water and other fluids where tight shut-off is desired, stainless steel pistons are optional.
Diaphragm: Bronze, 316 stainless steel, NBR, NBR with PTFE liner, FKM, Monel®
Diaphragm gasket (used only with metal diaphragms)**:** Aramid fiber (PTFE to special order).
Bottom cap gasket: Aramid fiber (PTFE to special order).
Adjusting screw cap (when furnished)**:** brass (stainless steel to special order).

FEATURES

Adjusting screw
A hex head adjusting screw and hex lock nut are standard. An optional T-bar is available to special order.

OPTIONS

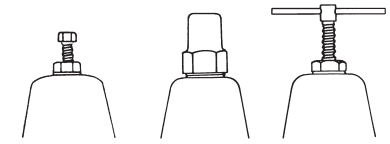

Optional cryogenic service
Approved construction is offered for handling cold fluids, e.g. pressure building regulators on liquid to gas oxygen and nitrogen converters. Special stainless steel pressure springs for higher ranges than those shown in the spring range table are available for this service. See datasheet VCTDS-00514 for more information.

Internal design features

1. Except for the steam valves, the valve piston is fully balanced against inlet and outlet pressures. This provides close control despite wide inlet pressure variations.
2. A flat seat ring rather than a beveled seat is employed for better shut-off, higher capacity and easier maintenance.
3. The internal parts are well guided to assure proper seating.
4. The Type G60 has a large diaphragm and long pressure spring which, in combination, provide for a wide range of adjustment and give exceptional sensitivity of control.

TYPE G-60 INTERIOR STEAM REGULATOR

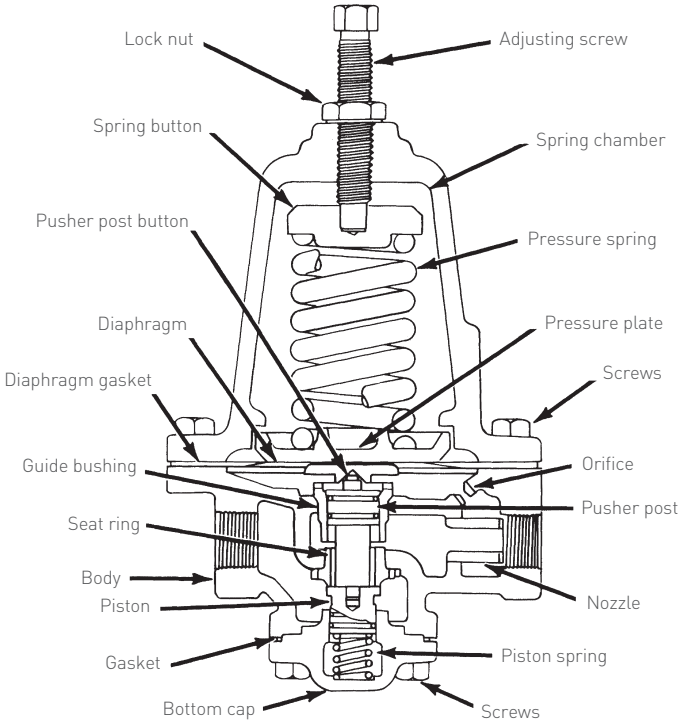

Monel® is a mark owned by Special Metals Corporation.

Optional differential pressure control
The Type G60 can serve as a constant-differential valve through a slight modification of the standard valve design. This is accomplished by incorporating a ¼ in. (8 mm) side tap in the spring housing. In a typical steam/oil atomizing installation (below), loading pressure is introduced above the Type G60 diaphragm and steam is delivered through the valve at a regulated pressure higher than the loading pressure, with the pressure difference being determined by the diaphragm spring setting. The outlet steam pressure is maintained automatically to provide a constant, fixed pressure differential between the steam pressure and oil pressure. Variations in the loading pressure are reflected in a pound-for-pound change in the discharge pressure.

Valves equipped with the optional differential pressure control are fitted with a pressure-tight closing cap over the pressure adjusting screw, a gasket above the diaphragm and a gasket seal to the closing cap.

STEAM/OIL ATOMIZING CONTROL

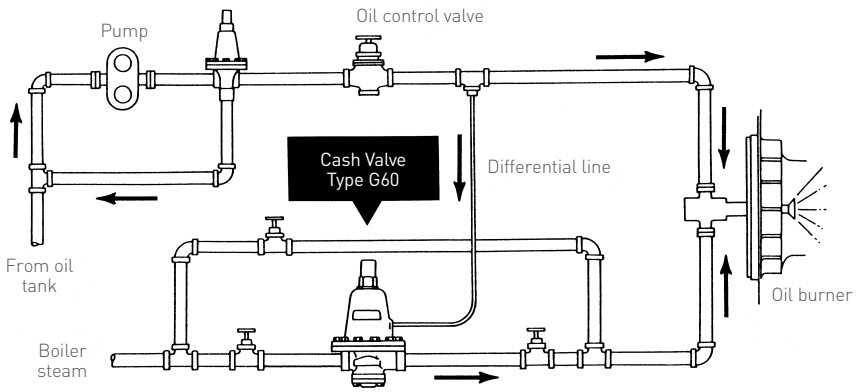

GENERAL SPECIFICATIONS

Body Material	Spring Chamber Material	Service	Materials: Seat (Disc)	Materials: Diaphragm	Maximum Inlet Pressure, psig (barg)	Maximum Outlet Pressure, psig (barg)	Temperature Range, °F (°C)
Bronze[1]	Bronze	Steam	303 SST	Bronze or Monel®[2]	300 (20.7)	250 (17.2)	-50 to 410 (-45 to 210)
			303 SST	316 SST	300 (20.7)	250 (17.2)	-50 to 500 (-45 to 260)
		Water and Air	PTFE, FKM, or NBR	Bronze, 316 SST, NBR, Monel®[2], NBR with PTFE liner[3] or FKM[4]	400 (27.6)	400 (27.6)	-20 to 180 (-29 to 82)
316 SST[1]	316 SST or 316L SST[5]	Steam	303 SST	Bronze, 316 SST, Monel®[2]	400 (27.6)	400 (27.6)	-50 to 700 (-45 to 371)
		Water and Air	PTFE, FKM, or NBR	Bronze, 316 SST, NBR, Monel®[2] or NBR with PTFE liner[3]	700 (48.3)	600 (41.4)	-20 to 180 (-29 to 82)
Steel	Steel	Steam	303 SST	Bronze, 316 SST or Monel®[2]	400 (27.6)	400 (27.6)	-50 to 700 (-45 to 371)
		Water and Air	PTFE, FKM, or NBR	Bronze, 316 SST, NBR, Monel®[2] or NBR with PTFE liner[3]	700 (48.3)	600 (41.4)	-20 to 180 (-29 to 82)
Iron	Iron	Steam	303 SST	Bronze, 316 SST or Monel®[2]	250 (17.2)	250 (17.2)	-50 to 410 (-45 to 210)
		Water and Air	PTFE, FKM, or NBR	Bronze, 316 SST, NBR, Monel®[2] or NBR with PTFE liner[3]	400 (27.6)	400 (27.6)	-20 to 180 (-29 to 82)

1. Bronze and stainless steel valves are also available for service to -320°F (-196°C) with cryogenic modification
2. For sizes ¼ and ⅜ in. (8 and 10 mm) only
3. For sizes ¾ to 1½ in. (20 to 40 mm) only
4. For size 1 in. (25 mm) only
5. For sizes ½ and 1 in. (15 and 25 mm) only

Monel® is a mark owned by Special Metals Corporation Group

STANDARD SPRING RANGES, psig (barg)

Service	Spring material	Size, in. (mm)	1	2	3	4	5	6	7
Steam	Steel	¼, ⅜ (8, 10)	1 to 15 (0.07 to 1.0)	5 to 40 (0.3 to 2.8)	20 to 90 (1.4 to 6.2)	30 to 125 (2.1 to 8.6)	75 to 250 (5.2 to 17.2)	- - - -	- - - -
		½ (15)	0 to 7 (0 to 0.5)	5 to 15 (0.3 to 1.0)	10 to 50 (0.7 to 3.4)	30 to 75 (2.1 to 5.2)	50 to 120 (3.4 to 8.3)	75 to 150 (5.2 to 10.3)	- - - -
		¾ (20)	5 to 15 (0.3 to 1.0)	10 to 50 (0.7 to 3.4)	30 to 75 (2.1 to 5.2)	50 to 120 (3.4 to 8.3)	75 to 150 (5.2 to 10.3)	- - - -	- - - -
		1 (25)	2 to 10 (0.1 to 0.7)	5 to 25 (0.3 to 1.7)	10 to 50 (0.7 to 3.4)	30 to 100 (2.1 to 6.9)	50 to 130 (3.4 to 9.0)	75 to 150 (5.2 to 10.3)	100 to 250 (6.9 to 17.2)
	SST	¼, ⅜ (8, 10)	5 to 30 (0.3 to 2.1)	15 to 65 (1.0 to 5.2)	30 to 110 (2.1 to 7.6)	75 to 200 (5.2 to 13.8)	100 to 400 (6.9 to 27.6)	- - - -	- - - -
		½ (15)	0 to 7 (0 to 0.5)	5 to 70 (0.3 to 4.8)	50 to 150 (3.4 to 10.3)	50 to 250 (3.4 to 17.2)	100 to 400 (6.9 to 27.6)	- - - -	- - - -
		¾ (20)	0 to 10 (0 to 0.7)	5 to 75 (0.3 to 5.2)	50 to 200 (3.4 to 13.8)	- - - -	- - - -	- - - -	- - - -
		1 (25)	10 to 50 (0.7 to 3.4)	50 to 200 (3.4 to 13.8)	- - - -	- - - -	- - - -	- - - -	- - - -
		1¼, 1½ (32, 40)	5 to 15 (0.3 to 1.0)	10 to 50 (0.7 to 3.4)	30 to 75 (2.1 to 5.2)	50 to 120 (3.4 to 8.3)	75 to 150 (5.2 to 10.3)	100 to 400 (6.9 to 27.6)	- - - -
Water and Air	Steel	¼, ⅜ (8, 10)	1 to 15 (0.07 to 1.0)	5 to 40 (0.3 to 2.8)	20 to 90 (1.4 to 6.2)	30 to 125 (2.1 to 8.6)	75 to 250 (5.2 to 17.2)	- - - -	- - - -
		½ (15)	0 to 7 (0 to 0.5)	5 to 15 (0.3 to 1.0)	10 to 50 (0.7 to 3.4)	30 to 75 (2.1 to 5.2)	50 to 120 (3.4 to 8.3)	75 to 150 (5.2 to 10.3)	- - - -
		¾ (20)	5 to 15 (0.3 to 1.0)	10 to 50 (0.7 to 3.4)	30 to 75 (2.1 to 5.2)	50 to 120 (3.4 to 8.3)	75 to 150 (5.2 to 10.3)	- - - -	- - - -
		1 (25)	2 to 10 (0.1 to 0.7)	5 to 25 (0.3 to 1.7)	10 to 50 (0.7 to 3.4)	30 to 100 (2.1 to 6.9)	50 to 130 (3.4 to 9.0)	75 to 150 (5.2 to 10.3)	100 to 250 (6.9 to 17.2)
	SST	¼, ⅜ (8, 10)	5 to 30 (0.3 to 2.1)	15 to 65 (1.0 to 5.2)	30 to 110 (2.1 to 7.6)	75 to 200 (5.2 to 13.8)	100 to 400 (6.9 to 27.6)	100 to 600 (6.9 to 41.4)	- - - -
		½ (15)	0 to 7 (0 to 0.5)	5 to 70 (0.3 to 4.8)	50 to 150 (3.4 to 10.3)	50 to 250 (3.4 to 17.2)	100 to 400 (6.9 to 27.6)	200 to 500 (13.8 to 34.5)	- - - -
		¾ (20)	0 to 10 (0 to 0.7)	5 to 75 (0.3 to 5.2)	50 to 200 (3.4 to 13.8)	100 to 400 (6.9 to 27.6)	100 to 600 (6.9 to 41.4)	- - - -	- - - -
		1 (25)	10 to 50 (0.7 to 3.4)	50 to 200 (3.4 to 13.8)	100 to 400 (6.9 to 27.6)	100 to 600 (6.9 to 41.4)	- - - -	- - - -	- - - -
		1¼, 1½ (32, 40)	5 to 15 (0.3 to 1.0)	10 to 50 (0.7 to 3.4)	30 to 75 (2.1 to 5.2)	50 to 120 (3.4 to 8.3)	75 to 150 (5.2 to 10.3)	100 to 400 (6.9 to 27.6)	- - - -

TYPE G60 WITH THREADED CONNECTIONS

Description						
	Pipe size,	Dimensions, in. (mm)			Shipping weight, lbs (kg)	
Type	in. (mm)	A	B	C	Iron	Bronze
G60	¼ (8)	4.00 (102)	6.53 (166)	2.16 (54.9)	8 (3.6)	9 (4.1)
	⅜ (10)	4.00 (102)	6.46 (164)	2.15 (54.6)	8 (3.6)	9 (4.1)
	½ (15)	4.75 (121)	7.65 (194)	2.32 (58.9)	15 (6.8)	16 (7.3)
	¾ (20)	5.63 (143)	9.95 (253)	2.60 (66.0)	22 (10.0)	24 (10.9)
	1 (25)	6.50 (165)	10.58 (269)	2.82 (71.6)	32 (14.5)	35 (15.9)
	1¼ (32)	8.00 (203)	11.89 (302)	3.53 (89.7)	58 (26.3)	62½ (28.4)
	1½ (40)	8.00 (203)	11.91 (303)	3.55 (90.2)	58 (26.3)	62½ (28.4)

TYPE G60
Threaded connections

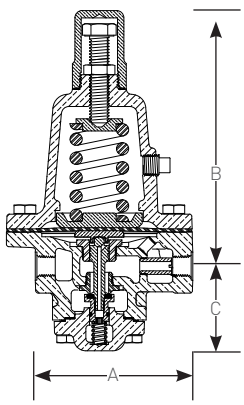

TYPE G60 AIR CAPACITY INFORMATION

Inlet pressure, psig	Outlet pressure, psig	Air capacity In SCFM by size, in.						
		¼	⅜	½	¾	1	1¼	1½
25	15	11	19	30	55	88	127	160
	10	13	23	36	65	104	150	189
50	40	12	21	33	60	96	138	174
	25	20	35	55	100	160	230	290
	10	21	37	58	105	168	242	305
75	65	15	26	41	75	120	173	218
	50	26	46	72	130	208	299	377
	25	29	51	80	145	232	334	421
	10	29	51	80	145	232	334	421
100	90	17	30	47	85	136	196	247
	75	27	47	74	135	216	311	392
	50	34	60	94	170	272	391	493
	25	36	63	99	180	288	414	522
125	100	28	49	77	140	224	322	406
	75	36	63	99	180	288	414	522
	50	42	74	116	210	336	483	609
	25	50	88	138	250	400	575	725
150	140	21	37	58	105	168	242	305
	100	38	66	105	190	304	437	551
	75	44	77	121	220	352	506	638
	50	52	91	143	260	416	598	754
	25	54	95	149	270	432	621	783
200	150	45	79	124	225	360	450	653
	100	52	91	143	260	416	598	754
	75	54	95	149	270	432	621	783
	50	56	98	154	280	448	644	812
	25	56	98	154	280	448	644	812
250	150	55	96	151	275	440	633	798
	100	57	100	157	285	456	656	827
	75	65	114	179	325	520	748	943
	50	68	119	187	340	544	782	986
	25	69	121	190	345	552	794	1001
300/400	150	59	103	162	295	472	679	856
	100	68	119	187	340	544	782	986
	75	70	123	193	350	560	805	1015
	50	71	124	195	355	568	817	1030

1. Capacities are based on a 20% fall-off
2. To obtain capacities for regulators using metal diaphragms, multiply the table values by 0.7

CAPACITY

The amount of air or fluid any regulator will pass is governed by two factors:

1. Pressure differential, or the difference between the inlet and outlet pressure.
2. A characteristic known as fall-off or droop, by which the outlet pressure drops slightly as flow starts through the valve and drops off even more as increased demand requires increased flow.

The rates of flow stated on the following charts are based on maximum fall-off or droop of 20% from set pressure.

TYPE G60 STEAM CAPACITY INFORMATION

Inlet pressure, psig	Outlet pressure, psig	Steam (lbs.) per hour by size, in.						
		¼	⅜	½	¾	1	1¼	1½
25	15	36	48	72	120	192	264	324
	10	50	66	100	150	240	330	405
50	40	49	65	98	145	238	327	401
	25	72	96	144	240	384	528	648
	10	75	100	150	250	400	550	675
75	65	53	71	105	157	252	345	425
	50	90	120	180	300	480	660	810
	25	105	140	210	350	560	770	945
	10	105	140	210	350	560	770	945
100	90	70	78	117	195	313	430	528
	75	113	150	225	375	600	825	1013
	50	134	178	267	445	712	979	1202
	25	135	180	270	450	720	990	1215
125	100	105	140	210	350	560	770	945
	75	158	210	315	525	840	1155	1418
	50	165	220	330	550	880	1210	1485
	25	168	224	336	560	896	1232	1512
150	140	57	76	125	210	340	420	580
	100	165	220	330	550	880	1210	1485
	75	188	250	375	625	1000	1375	1688
	50	195	260	390	650	1040	1430	1755
	25	197	262	393	655	1048	1441	1769
200	150	198	264	396	660	1056	1452	1782
	100	263	350	525	875	1400	1925	2363
	75	278	370	555	925	1480	2035	2498
	50	275	372	558	930	1488	2046	2511
	25	275	372	558	930	1488	2046	2511
250	150	266	354	531	885	1416	1947	2390
	100	324	432	648	1080	1728	2376	2916
	75	338	450	675	1125	1800	2475	3038
	50	345	460	690	1150	1840	2530	3105
	25	345	460	690	1150	1840	2530	3105
300/400	150	330	440	660	1100	1760	2420	2970
	100	387	516	774	1290	2064	2838	3483
	75	390	520	780	1300	2000	2860	3510
	50	390	520	780	1300	2000	2860	3510

1. Capacities are based on a 20% fall-off

TYPE G60 WATER CAPACITY INFORMATION

Inlet pressure, psig	Outlet pressure, psig	Gallons per minute by size, in.						
		¼	⅜	½	¾	1	1¼	1½
25	15	2.2	3.9	6.0	11.0	17.6	24.2	29.7
	10	2.4	4.2	6.6	12.0	19.2	26.4	32.4
50	40	2.4	4.2	6.6	12.0	19.2	26.4	32.4
	25	3.4	6.0	9.4	17.0	27.2	37.4	45.9
	10	4.0	7.0	11.0	20.0	32.0	44.0	54.0
75	65	2.4	4.2	6.6	12.0	19.2	26.4	32.4
	50	3.2	5.6	8.8	16.0	25.6	35.2	43.2
	25	5.0	8.8	13.8	25.0	40.0	55.0	67.5
	10	5.2	9.1	14.3	26.0	41.6	57.2	70.2
100	90	2.6	4.6	7.2	13.0	20.8	28.6	35.1
	75	3.6	6.3	9.9	18.0	28.8	39.6	48.6
	50	4.6	8.0	12.7	23.0	36.8	50.6	62.1
	25	5.8	10.2	16.0	29.0	46.4	63.8	78.3
125	100	3.8	6.7	10.5	19.0	30.4	41.8	51.3
	75	4.8	8.4	13.2	24.0	38.4	52.8	64.8
	50	5.4	9.5	14.9	27.0	43.2	59.4	72.9
	25	6.4	11.2	17.6	32.0	51.2	70.4	86.4
150	140	3.0	5.3	8.3	15.0	24.0	33.0	40.5
	100	5.2	9.1	14.3	26.0	41.6	57.2	70.2
	75	6.2	10.9	17.1	31.0	49.6	68.2	83.7
	50	6.8	11.9	18.7	34.0	54.4	74.8	91.8
	25	7.0	12.3	19.3	35.0	56.0	77.0	94.5
200	150	5.4	9.5	14.9	27.0	43.2	59.4	72.9
	100	7.0	12.3	19.3	35.0	56.0	77.0	94.5
	75	7.2	12.6	19.8	36.0	57.6	79.2	97.2
	50	7.8	13.7	21.5	39.0	62.4	85.8	105.3
	25	8.0	14.0	22.0	40.0	64.0	88.0	108.0
250	150	7.0	12.3	19.3	35.0	56.0	77.0	94.5
	100	7.8	13.7	21.5	39.0	62.4	85.8	105.3
	75	8.0	14.0	22.0	40.0	64.0	88.0	108.0
	50	8.4	14.7	23.1	42.0	67.2	92.4	113.4
	25	8.6	15.1	23.7	43.0	68.8	94.6	116.1
300/400	150	7.8	13.7	21.5	39.0	62.4	85.8	105.3
	100	8.4	14.7	23.1	42.0	67.2	92.4	113.4
	75	8.8	15.4	24.2	44.0	70.4	96.8	118.8
	50	9.0	15.8	24.8	45.0	72.0	99.0	121.5

1. Capacities are based on a 20% fall-off
2. To obtain capacities for regulators using metal diaphragms, multiply the table values by 0.7

SELECTION GUIDE

Example:	G60Z	A	W	S	S	Z	Z	B	S	01	-	D	1

Model

G60Z Type G60 with bronze body
G60F Type G60 with iron body
G60D Type G60 with carbon steel body
G60G Type G60 with 316 stainless steel body

Valve size

A ¼ in. (8 mm) **E** 1 in. (25 mm)
B ⅜ in. (10 mm) **F** 1¼ in. (32 mm)
C ½ in. (15 mm) **G** 1½ in. (40 mm)
D ¾ in. (20 mm)

Service

W Water/air service **S** Steam service

Body/connection style

S Side inlet/side outlet - straight through with NPT connections

Spring chamber style

S Standard **D** With pressure screw cap and differential connection

Spring chamber material

Z Bronze **D** Carbon steel
F Iron **G** Stainless steel

Diaphragm material

B NBR **V** FKM (water/air)
Z Bronze (all) **L** NBR with PTFE diaphragm liner (water/air)
G 316 Stainless steel **M** Monel®

Seat material

B NBR (water/air) **E** 303 Stainless steel (steam)
T PTFE (water/air) **V** FKM (water/air)

Pressure screw style

S Standard **T** T-handle

Variation

01 Standard (303 stainless steel trim) (303 SST seat ring, 303 SST pusher post button, 303 SST pusher post, 303 SST guide bushing, 303 SST piston orifice, 303 SST nozzle and 316 SST bottom cap)
02 303 Stainless steel trim with PTFE gasketing (303 SST seat ring, 303 SST pusher post button, 303 SST pusher post, 303 SST guide bushing, 303 SST piston orifice, 303 SST nozzle and 316 SST bottom cap)
11 316 Stainless steel trim (316 SST seat ring, 316 SST pusher post button, 316 SST pusher post, 316 SST guide bushing, 316 SST piston orifice, 316 SST nozzle and 316 SST bottom cap)
12 316 Stainless steel trim with PTFE gasketing (316 SST seat ring, 316 SST pusher post button, 316 SST pusher post, 316 SST guide bushing, 316 SST piston orifice, 316 SST nozzle and 316 SST bottom cap)
21 Monel® trim (¼ and ⅜ in. water/air service only) (Monel® pusher post button, Monel® pusher post, Monel® guide bushing, Monel® piston orifice, Monel nozzle and Monel bottom cap)
31 Brass trim (303 SST seat ring, brass pusher post button, brass pusher post, 303 SST guide bushing, brass piston orifice, brass nozzle and bronze bottom cap)
33 Brass trim with SST bottom cap (303 SST seat ring, brass pusher post button, brass pusher post, 303 SST guide bushing, brass piston orifice, brass nozzle and 316 SST bottom cap)

Design revision

(-) Indicates original design

Spring material

D Carbon steel (water/air, steam service only) **E** Stainless steel

Spring range

Refer to table in page 4

Monel® is a mark owned by Special Metals Corporation.

CASH VALVE™ FR SERIES BACK PRESSURE VALVES

Diaphragm actuated valves designed for either continuous or intermittent .operation which provide accurate, repetitive pressure control

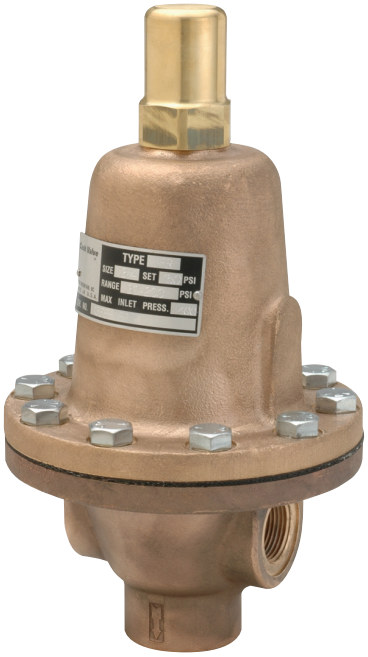

GENERAL APPLICATION

For use on practically all fluids and gases except steam, these valves are especially suited for all grades of oils, including Bunker 'C', and may be used in centrifugal, regenerative turbine, reciprocating or rotary pump bypass valve applications.

TECHNICAL DATA[1]

Materials:	Brass, brass, carbon steel, cast iron, stainless steel
Sizes:	¼ to 2 in. (8 to 50 mm)
Connections:	NPTF, BSPT
Pressure range:	0 to 600 psig (0 to 41.4 barg)
Temperature range:	-40 to 450°F (-40 to 232°C)

FEATURES

- Protect against periodic high pressure, control dependably at adjusted pressures and shut tight.
- Maintain a pre-determined pressure on the inlet regardless of variations in pressure at the outlet.
- Unique full 'floating ring' seating arrangement provides smooth, even control in response to pressure changes.
- Globe type body with two side inlets and a bottom outlet, suitable for angle or in-line installation.
- Types FR and FR-6 fitted with a closing cap to discourage unauthorized tampering.
- Optional differential pressure control modification enables a constantly held difference between reference and valve inlet pressures.
- Type FR-6 incorporates a diaphragm ring above the diaphragm for higher back pressure ranges.
- Rugged, simple design enables easy on-line maintenance and repair.
- Optional cryogenic service construction available for handling cold fluids to -320°F (-195°C).

1. Refer to General Specifications Table in page 2 for more information.

.Emerson. All Rights Reserved 2017 ©

GENERAL SPECIFICATIONS

Product	Body Material	Spring Chamber Material	Service	Body Size, in. (mm)	Materials		Maximum Inlet Pressure, psig (barg	Maximum Outlet Pressure, psig (bar)	Temperature Range, °F (°C)
					Diaphragm	O-ring			
FR	Bronze, 316 SST, Steel or Iron	Bronze, 316 SST, Steel or Iron	Water/Air, Oil/Gases	½ to 2 (15 to 50)	Bronze, Monel® or 316 SST	PTFE	400 (27.6)	400 (27.6)	-40 to 450 (-40 to 232)
						NBR or FKM	400 (27.6)	400 (27.6)	-40 to 180 (-40 to 82)
					NBR, FKM or NBR with PTFE Liner	- - - -	400 (27.6)	400 (27.6)	-40 to 180 (-40 to 82)
FR-6	Bronze or 316 SST	Bronze or 316 SST	Water/Air, Oil/Gases	½ to 2 (15 to 50)	Bronze, Monel® or 316 SST	PTFE	600 (41.4)	600 (41.4)	-40 to 450 (-40 to 232)
						NBR or FKM	600 (41.4)	600 (41.4)	-40 to 180 (-40 to 82)
					NBR or NBR with PTFE Liner	- - - -	600 (41.4)	600 (41.4)	-40 to 180 (-40 to 82)
FR-10	Iron	Iron	Water/Air, Oil/Gases	½ to 2 (15 to 50)	Monel®	PTFE	250 (17.2)	250 (17.2)	-40 to 180 (-40 to 82)
						NBR or FKM	250 (17.2)	250 (17.2)	-40 to 180 (-40 to 82)
					NBR or FKM	- - - -	250 (17.2)	250 (17.2)	-40 to 180 (-40 to 82)
FRM	Brass or 316 SST	Brass or Aluminum	Water/Air, Oil/Gases	¼ and ⅜ (8 and 10)	Bronze	- - - -	600 (41.4)	600 (41.4)	-40 to 400 (-40 to 204)
					316 SST	- - - -	600 (41.4)	600 (41.4)	-40 to 400 (-40 to 204)
					NBR	- - - -	600 (41.4)	600 (41.4)	-40 to 180 (-40 to 82)
					Neoprene	- - - -	600 (41.4)	600 (41.4)	-40 to 180 (-40 to 82)
FRM-2	Brass or 316 SST	Brass	Water/Air, Oil/Gases	¼ to ½ (8 to 15)	Bronze	- - - -	600 (41.4)	600 (41.4)	-40 to 400 (-40 to 204)
					316 SST	- - - -	600 (41.4)	600 (41.4)	-40 to 400 (-40 to 204)
					NBR	- - - -	600 (41.4)	600 (41.4)	-40 to 180 (-40 to 82)
					FKM	- - - -	600 (41.4)	600 (41.4)	-40 to 180 (-40 to 82)
					Neoprene	- - - -	600 (41.4)	600 (41.4)	-40 to 180 (-40 to 82)

Monel® is a mark owned by Special Metals Corporation.

TYPES FR, FR-6, FR-10 OVERVIEW

When sized correctly, these valves will both open and close at predetermined points to provide accurate functional control for the continuous protection of pumps, process piping systems and similar equipment. They are not emergency devices, but are continuously operating valves which provide accurate, repetitive pressure control.

Sizes: ½, ¾, 1, 1 ¼, 1 ½ and 2 in. (15, 20, 25, 32, 40 and 50 mm).

FR Series valves are available in various pressure control and temperature ranges and are designated as follows:

- Type FR has a bronze body as standard, is suitable for pressures of 0 to 400 psig (0 to 27.6 barg) and maximum temperatures 180 to 450°F (82 to 232°C).
- Type FR-6 incorporates a diaphragm ring mounted above the diaphragm to accommodate higher back pressure ranges: 200 to 600 psig (13.8 to 41.4 barg); 180 to 450°F (82 to 232°C).
- The Type FR-10 is for more economical, lower pressure applications and is fitted with an iron body and spring chamber: 0 to 250 psig (0 to 17.2 barg); 180°F (82°C).

OPERATION

In a typical installation, inlet pressure enters from the side of the valve and registers under the diaphragm. When pressure rises above the set point of the valve, the diaphragm moves upward - away from the seat - allowing flow to pass through the bottom port. When inlet pressure drops below the setting of the valve, the diaphragm moves downward to the closed position.

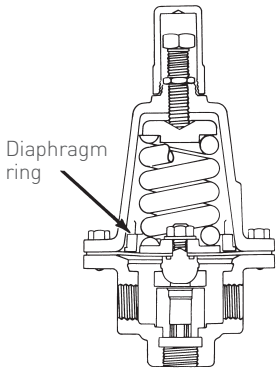

TYPE FR-6 INTERIOR VIEW

UNIQUE 'FLOATING RING' SEATING DESIGN

The valves' 'floating ring' principle compensates completely for unavoidable misalignment, producing perfect seat contact, free to move laterally in any direction to find its own correct alignment with the spherical seat disc.

It is thoroughly tested and proven to give far superior performance than ordinary valves using pistons and cylinders where good seat alignment is next to impossible. The diaphragm and seat disc are fastened together securely resulting in positive and rapid seat movement in response to all pressure changes.

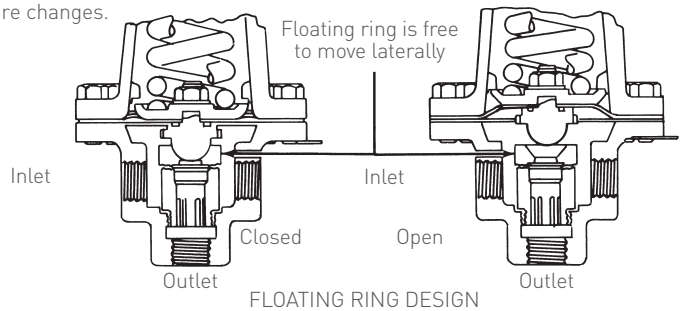

FLOATING RING DESIGN

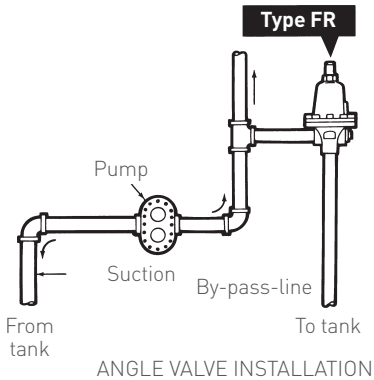

ANGLE VALVE INSTALLATION

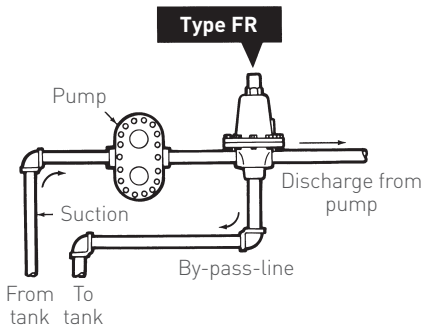

IN-LINE INSTALLATION (BOTTOM BY-PASS)

TYPES FR, FR-6, FR-10 CONSTRUCTION/SPECIFICATIONS

FR Series back pressure valves incorporate an iron or bronze body (iron standard for Type FR-10; carbon steel or stainless steel may be fitted to Types FR and FR-6 on special order) with threaded connections; bronze, stainless steel, Monel®, Fluorocarbon (FKM) or Nitrile (NBR) diaphragm .brass or stainless steel body seat, with a renewable stainless seat disc and seat ring

TYPES FR, FR-6, FR-10

Valve size, in. (mm)	Dimensions, in. (mm)					Shipping weight, lbs (kg)		
	A	B	C	D	E	Iron	Bronze	Iron (FR-10)
½ (15)[1]	4.75 (121)	6.88 (175)	1.62 (41.4)	1.44 (36.6)	2.88 (73.2)	8 (3.63)	9½ (4.31)	7 (3.18)
¾ (20)	5.63 (143)	7.97 (202)	2.00 (50.8)	1.69 (42.9)	3.38 (85.9)	13 (5.90)	14¾ (6.69)	11½ (5.22)
1 (25)	6.50 (165)	10.31 (262)	2.25 (57.2)	2.13 (54.1)	4.25 (108)	20¼ (9.19)	23½ (10.7)	18¼ (8.28)
1¼ (32)	6.50 (165)	10.44 (265)	2.38 (60.5)	2.13 (54.1)	4.25 (108)	21½ (9.75)	24½ (11.1)	19½ (8.85)
1½ (40)	7.50 (191)	10.81 (275)	2.63 (66.8)	2.50 (63.5)	5.00 (127)	29 (13.1)	33 (15.0)	27 (12.2)
2 (50)	7.50 (191)	11.06 (281)	3.00 (76.2)	2.50 (63.5)	5.00 (127)	31½ (14.3)	35½ (16.1)	29½ (13.4)

1. ½ in. (15 mm) Type FR only UL approved in iron body and metal diaphragm up to 150 psi (10.3 bar).

Important: All Types FR, FR-6 and FR-10 are furnished with a travel stop that prevents diaphragms from extending beyond their limit.

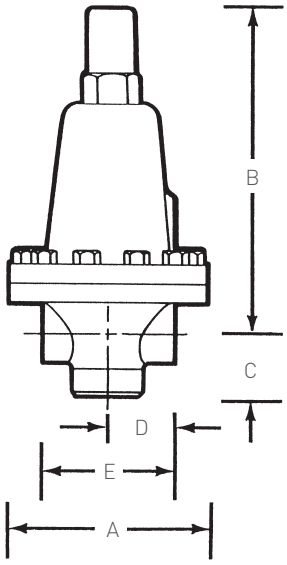

TYPE FR

Monel® is a mark owned by Special Metals Corporation.

TYPES FRM, FRM-2 OVERVIEW

Types FRM and FRM-2 function as automatic pressure limiting regulators, maintaining a desired maximum pressure in a system or vessel by relieving excess pressure. They are small and compact, yet are highly efficient, making them suitable for numerous applications that call for a small accurate back pressure regulator for service on liquids, air and gases not corrosive to brass. Furnished with either bronze, stainless steel, NBR or neoprene diaphragms in three body styles.

Sizes: ¼, ⅜ and ½ in. (8, 10 and 15 mm).

Maximum temperature:
with NBR or neoprene diaphragm: 180°F (82°C).
with Bronze or stainless steel diaphragm: 500°F (260°C).

• Type FRM-2 is designed with larger physical dimensions and internal seat opening providing greater capacity. It is also suitable for fuel oils and lube oils and is available in stainless steel body with system exposed internal parts for service with corrosive or harsh fluids.
• Types FRM and FRM-2 incorporate the same superior 'floating ring' design as the larger Type FR to provide smooth, even pressure control.
• Optional cryogenic service construction is offered for the FRM and FRM-2 to enable them to be used for oxygen service suitable for temperatures to -320°F (-195°C).
• All versions fitted with adjusting screw as standard. Also available with T-handle and with bushing for mounting the valve to a control panel, on special order.
• All valves are furnished with a travel stop that prevents diaphragms from extending beyond their limit.

TYPE FRM

TYPE FRM-2

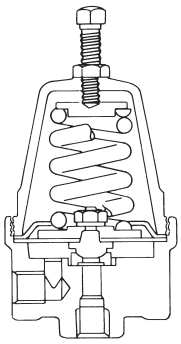

TYPE FRM-2
SIDE INLET - BOTTOM OUTLET

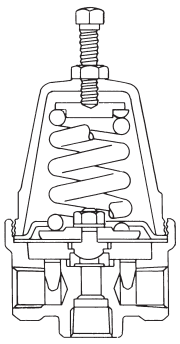

TYPE FRM-2
TWO SIDE INLET - BOTTOM OUTLET

TYPES FRM, FRM-2 CONSTRUCTION/SPECIFICATIONS

FRM Series are diaphragm-type miniature back pressure valves fitted with forged brass bodies, brass or aluminum (Type FRM only) spring chambers and neoprene or bronze diaphragms.

TYPES FRM, FRM-2 DIAPHRAGM MINIATURE BACK PRESSURE VALVES

Type	Valve size, in. (mm)	Relief pressure range, psi (bar)	Valve connections[2]		
			S.I.-S.O.	S.I.-B.O.	2S.I.-B.O.
FRM	¼, ⅜ (8, 10)	0 to 600 (0 to 41.4)	X	X	X
FRM-2[1]	¼, ⅜, ½ (8, 10, 15)	0 to 600 (0 to 41.4)	X	X	X

1. The Type FRM-2 is UL approved in all sizes and body styles with metal diaphragms up to 150 psi (10.3 bar).
2. Abbreviations used above are to be read as follows: S.I. = Side Inlet; 2S.I. = Two Side Inlets; S.O. = Side Outlet; B.O. = Bottom Outlet

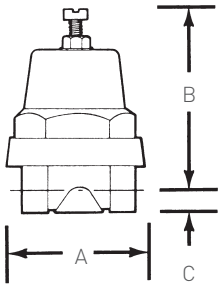

TYPE FRM

DIMENSIONS

Type	Valve Size, in. (mm)	Dimensions, in. (mm)			Shipping weight, lbs (kg)
		A	B	C	
FRM	¼(8)	2.30 (58.3)	3.19 (81.1)	0.44 (11.1)	1 ⅛ (0.51)
FRM	⅜ (10)	2.30 (58.3)	3.19 (81.1)	0.44 (11.1)	1 ⅛ (0.51)
FRM-2	¼ (8)	2.88 (73.2)	4.50 (114)	1.00 (25.4)	2 ½ (1.13)
FRM-2	⅜ (10)	2.69(68.3)	4.50 (114)	0.75 (19.1)	2 ½ (1.13)
FRM-2	½ (15)	2.96 (75.2)	4.59 (117)	1.13 (28.7)	3 ½ (1.59)

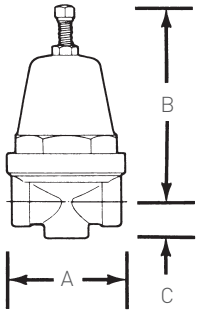

TYPE FRM-2

CAPACITY INFORMATION

The capacity charts for water are based on the specific gravity reading of water. If a liquid with a specific gravity other than that of water is being used in the system, it is necessary to apply a correction factor. For example, if a fluid to be used has a specific gravity reading of 1.5 and the given flow is 40 gpm: Refer to the specific gravity graph and find 1.5 on the vertical axis then read across to the diagonal intersect to obtain a S.G. factor of .8. Divide the given flow (40 gpm) by the 0.8 factor and obtain 50 gpm, the corrected flow for the fluid being used. Refer to the capacity charts to determine the correct valve size that should be used at the desired set pressure and at the corrected flow.

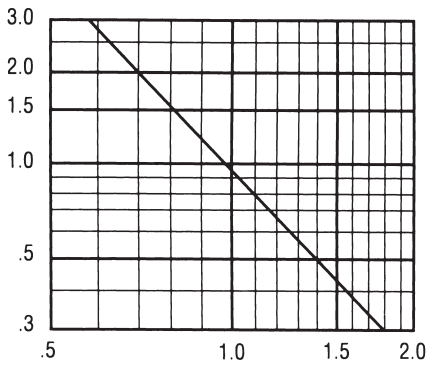

TYPES FR, FR-6, FR-10 WATER CAPACITY (gpm)

Types			Set pressure[1],	Inlet size ½ in. (15 mm)					
				Rubber diaphragm			Metal diaphragm		
FR	FR-6	FR-10	psig	10% Rise	20% Rise	30% Rise	10% Rise	20% Rise	30% Rise
X		X	[2]10	2.0	4.0	6.0	1.0	1.5	3.0
X		X	15	2.2	4.2	6.5	1.2	2.0	3.5
X		X	20	2.5	4.5	7.5	1.4	2.5	4.0
X		X	30	3.0	5.0	9.0	1.7	3.0	5.0
X		X	40	3.5	6.0	9.7	2.0	3.5	6.0
X		X	50	3.7	6.5	10.5	2.2	4.0	7.0
X		X	75	4.5	7.5	13.0	2.6	5.0	8.0
X		X	100	5.0	9.5	16.0	3.0	6.0	10.0
X		X	150	7.0	11.5	19.0	3.5	8.0	13.0
X	X	X	200	8.0	15.0	22.0	4.5	10.0	17.0
X	X		300	12.0	19.0	25.0	7.5	15.0	22.0
X	X		400	18.0	24.0	25.0	12.0	23.0	25.0
	X		600	21.0	25.0	25.0	16.0	25.0	25.0

TYPES FR, FR-6, FR-10 WATER CAPACITY (gpm) (CONTINUED)

Types			Set pressure[1],	Inlet size ¾ in. (20 mm)					
				Rubber diaphragm			Metal diaphragm		
FR	FR-6	FR-10	psig	10% Rise	20% Rise	30% Rise	10% Rise	20% Rise	30% Rise
X		X	[2]10	3.0	6.0	8.0	1.8	3.5	5.5
X		X	15	3.2	6.2	8.5	2.0	4.5	6.5
X		X	20	3.5	6.7	10.0	2.5	5.0	7.5
X		X	30	4.0	7.2	11.5	3.0	6.0	9.5
X		X	40	4.5	8.5	12.5	3.5	7.0	11.0
X		X	50	4.7	9.5	14.5	4.0	8.0	12.0
X		X	75	5.5	11.5	17.0	5.0	10.0	14.0
X		X	100	6.0	14.0	21.0	6.0	11.0	16.0
X		X	150	9.0	18.0	25.0	7.0	15.0	20.0
X	X	X	200	11.0	21.5	30.0	9.0	17.0	24.0
X	X		300	16.0	26.5	30.0	13.0	20.0	28.0
X	X		400	23.0	30.0	30.0	17.0	28.0	30.0
	X		600	30.0	30.0	30.0	20.0	30.0	30.0

TYPES FR, FR-6, FR-10 WATER CAPACITY (gpm) (CONTINUED)

Types			Set pressure[1],	Inlet size 1 in. (25 mm)					
				Rubber diaphragm			Metal diaphragm		
FR	FR-6	FR-10	psig	10% Rise	20% Rise	30% Rise	10% Rise	20% Rise	30% Rise
X		X	[2]10	4.0	8.0	14.0	2.5	5.5	7.8
X		X	15	5.0	10.0	17.0	3.0	6.5	9.5
X		X	20	6.0	12.0	20.0	3.5	7.5	11.0
X		X	30	7.5	14.0	23.0	4.0	9.0	13.0
X		X	40	9.0	16.0	26.0	5.0	10.5	15.0
X		X	50	10.0	18.0	30.0	5.5	12.0	17.0
X		X	75	12.0	20.0	38.0	6.5	14.5	20.0
X		X	100	14.5	27.0	46.0	7.5	17.0	24.0
X		X	150	17.0	33.0	54.0	9.0	21.0	30.0
X	X	X	200	22.5	41.0	54.0	11.0	24.0	33.0
X	X		300	27.0	54.0	54.0	15.0	29.0	42.0
X	X		400	34.0	54.0	54.0	20.0	34.0	54.0
	X		600	54.0	54.0	54.0	24.0	50.0	54.0

NOTES

1. Set pressures are based upon valve discharge into an atmospheric pressure return line. If return line pressure is significantly higher than atmospheric pressure, then consult factory for capacity information.
2. For set pressures less than 10 psi (0.69 bar) consult the factory.

TYPES FR, FR-6, FR-10 WATER CAPACITY (gpm) (CONTINUED)

Types			Set pressure[1],	Inlet size 1 ¼ in. (32 mm)					
				Rubber diaphragm			Metal diaphragm		
FR	FR-6	FR-10	psig	10% Rise	20% Rise	30% Rise	10% Rise	20% Rise	30% Rise
X		X	[2]10	5.0	11.5	18.0	3.0	6.5	9.5
X		X	15	6.0	12.5	20.0	3.8	8.0	11.5
X		X	20	7.0	14.0	23.0	4.5	9.0	13.5
X		X	30	8.0	16.0	27.0	5.5	11.5	16.5
X		X	40	10.0	18.0	31.0	6.3	13.2	19.0
X		X	50	11.0	20.0	34.0	7.0	14.7	21.5
X		X	75	13.0	24.0	42.0	8.5	18.0	26.0
X		X	100	16.0	32.0	50.0	9.8	21.0	30.0
X		X	150	20.0	44.0	66.0	12.0	25.5	40.0
X	X	X	200	25.0	55.0	80.0	14.0	29.5	53.0
X	X		300	34.0	70.0	80.0	17.0	36.0	80.0
X	X		400	42.0	80.0	80.0	22.0	48.0	80.0
	X		600	65.0	80.0	80.0	44.0	80.0	80.0

TYPES FR, FR-6, FR-10 WATER CAPACITY (gpm) (CONTINUED)

Types			Set pressure[1],	Inlet size 1 ½ in. (40 mm)					
				Rubber diaphragm			Metal diaphragm		
FR	FR-6	FR-10	psig	10% Rise	20% Rise	30% Rise	10% Rise	20% Rise	30% Rise
X		X	[2]10	6.0	13.0	20.0	4.2	7.8	11.8
X		X	15	7.0	14.0	23.0	5.0	9.5	14.2
X		X	20	8.0	15.0	27.0	6.0	11.0	16.5
X		X	30	9.0	18.0	30.0	7.2	13.5	20.0
X		X	40	11.0	20.0	34.0	8.5	15.5	23.5
X		X	50	13.0	23.0	40.0	9.5	17.3	26.0
X		X	75	15.0	32.0	49.0	11.5	21.0	36.0
X		X	100	18.0	40.0	60.0	13.2	24.5	48.0
X		X	150	22.0	54.0	77.0	16.2	30.0	62.0
X	X	X	200	27.0	70.0	93.0	19.0	40.0	80.0
X	X		300	39.0	95.0	110.0	23.0	53.0	100.0
X	X		400	50.0	120.0	120.0	26.0	66.0	120.0
	X		600	80.0	120.0	120.0	50.0	80.0	120.0

TYPES FR, FR-6, FR-10 WATER CAPACITY (gpm) (CONTINUED)

Types			Set pressure[1],	Inlet size 2 in. (50 mm)					
				Rubber diaphragm			Metal diaphragm		
FR	FR-6	FR-10	psig	10% Rise	20% Rise	30% Rise	10% Rise	20% Rise	30% Rise
X		X	[2]10	7	15	23	4.3	9.4	14.5
X		X	15	8	16	26	5.2	11.5	17.5
X		X	20	9	17	30	6.3	13.0	20.0
X		X	30	10	20	34	7.5	16.0	25.0
X		X	40	13	22	44	9.0	19.0	29.0
X		X	50	15	26	58	10.0	21.0	35.0
X		X	75	17	40	80	12.0	25.0	55.0
X		X	100	20	48	92	13.5	30.0	65.0
X		X	150	25	66	118	16.5	44.0	83.0
X	X	X	200	30	82	144	19.5	56.0	102.0
X	X		300	43	110	200	24.0	80.0	130.0
X	X		400	61	130	200	34.0	100.0	156.0
	X		600	108	162	200	64.0	136.0	200.0

NOTES

1. Set pressures are based upon valve discharge into an atmospheric pressure return line. If return line pressure is significantly higher than atmospheric pressure, then consult factory for capacity information.
2. For set pressures less than 10 psi (0.69 bar) consult the factory.

TYPES FR, FR-6, FR-10 AIR CAPACITY (SCFM)

Types			Set pressure[1],	Inlet size ½ in. (15 mm)					
				Rubber diaphragm			Metal diaphragm		
FR	FR-6	FR-10	psig	10% Rise	20% Rise	30% Rise	10% Rise	20% Rise	30% Rise
X		X	[2]10	7	15	22	3	7	10
X		X	15	8	17	30	4	9	14
X		X	20	10	19	38	5	10	16
X		X	30	13	24	48	7	13	20
X		X	40	16	34	56	8	17	25
X		X	50	19	44	72	10	19	34
X		X	75	30	56	90	11	23	44
X		X	100	40	74	108	12	32	60
X		X	150	60	104	150	14	46	84
X	X	X	200	92	140	200	16	60	120
X	X		300	140	210	300	22	90	160
X	X		400	180	280	400	35	120	240
	X		600	280	420	600	50	180	320

TYPES FR, FR-6, FR-10 AIR CAPACITY (SCFM) (CONTINUED)

Types			Set pressure[1],	Inlet size ¾ in. (20 mm)					
				Rubber diaphragm			Metal diaphragm		
FR	FR-6	FR-10	psig	10% Rise	20% Rise	30% Rise	10% Rise	20% Rise	30% Rise
X		X	[2]10	10	24	30	6	12	19
X		X	15	15	30	48	8	15	24
X		X	20	20	38	62	10	18	32
X		X	30	25	48	80	12	22	42
X		X	40	31	62	120	15	25	50
X		X	50	38	74	150	20	30	58
X		X	75	48	86	225	25	36	63
X		X	100	60	96	300	32	50	80
X		X	150	86	144	440	40	72	120
X	X	X	200	128	180	600	46	100	160
X	X		300	190	270	850	54	145	240
X	X		400	240	360	1200	65	200	320
	X		600	380	540	1700	80	290	480

TYPES FR, FR-6, FR-10 AIR CAPACITY (SCFM) (CONTINUED)

Types			Set pressure[1],	Inlet size 1 in. (25 mm)					
				Rubber diaphragm			Metal diaphragm		
FR	FR-6	FR-10	psig	10% Rise	20% Rise	30% Rise	10% Rise	20% Rise	30% Rise
X		X	[2]10	15	32	45	9	18	29
X		X	15	30	50	72	12	23	38
X		X	20	40	65	94	14	27	46
X		X	30	50	85	120	17	34	58
X		X	40	60	98	480	20	38	68
X		X	50	72	110	230	27	45	80
X		X	75	90	124	340	35	54	95
X		X	100	112	140	450	42	75	120
X		X	150	140	210	680	50	108	180
X	X	X	200	168	280	900	56	150	240
X	X		300	240	420	1250	66	215	360
X	X		400	320	560	1800	77	300	480
	X		600	480	820	2500	98	430	720

NOTES

1. Set pressures are based upon valve discharge into an atmospheric pressure return line. If return line pressure is significantly higher than atmospheric pressure, then consult factory for capacity information.
2. For set pressures less than 10 psi (0.69 bar) consult the factory.

TYPES FR, FR-6, FR-10 AIR CAPACITY (SCFM) (CONTINUED)

Types			Set pressure[1],	Inlet size 1¼ in. (32 mm)					
				Rubber diaphragm			Metal diaphragm		
FR	FR-6	FR-10	psig	10% Rise	20% Rise	30% Rise	10% Rise	20% Rise	30% Rise
X		X	**10	22	40	60	11	22	35
X		X	15	38	60	90	15	29	56
X		X	20	48	80	134	22	35	76
X		X	30	60	128	172	28	45	90
X		X	40	72	148	190	32	60	96
X		X	50	82	166	250	36	66	102
X		X	75	106	185	375	42	78	120
X		X	100	130	225	500	50	96	180
X		X	150	160	275	750	58	120	240
X	X	X	200	200	350	1000	64	160	360
X	X		300	300	500	1450	82	250	480
X	X		400	400	700	1950	120	350	700
	X		600	600	1000	2850	160	500	950

TYPES FR, FR-6, FR-10 AIR CAPACITY (SCFM) (CONTINUED)

Types			Set pressure[1],	Inlet size 1½ in. (40 mm)					
				Rubber diaphragm			Metal diaphragm		
FR	FR-6	FR-10	psig	10% Rise	20% Rise	30% Rise	10% Rise	20% Rise	30% Rise
X		X	[2]10	40	74	75	20	30	55
X		X	15	55	98	120	25	42	68
X		X	20	72	124	192	32	58	100
X		X	30	92	158	250	38	68	120
X		X	40	112	175	280	42	85	140
X		X	50	134	200	320	47	95	150
X		X	75	155	225	450	55	115	165
X		X	100	180	280	640	64	135	240
X		X	150	210	380	900	80	180	320
X	X	X	200	260	500	1250	100	250	480
X	X		300	400	700	1750	150	320	640
X	X		400	520	1000	2400	200	500	950
	X		600	800	1400	3450	300	650	1250

TYPES FR, FR-6, FR-10 AIR CAPACITY (SCFM) (CONTINUED)

Types			Set pressure[1],	Inlet size 2 in. (50 mm)					
				Rubber diaphragm			Metal diaphragm		
FR	FR-6	FR-10	psig	10% Rise	20% Rise	30% Rise	10% Rise	20% Rise	30% Rise
X		X	[2]10	64	112	144	32	48	80
X		X	15	88	144	208	40	64	104
X		X	20	112	184	296	48	88	150
X		X	30	136	224	384	55	104	172
X		X	40	152	248	424	62	120	200
X		X	50	170	280	488	70	144	215
X		X	75	190	312	650	82	168	240
X		X	100	240	410	850	92	200	320
X		X	150	300	550	1100	120	272	475
X	X	X	200	400	750	1700	152	352	640
X	X		300	624	1050	2100	220	480	950
X	X		400	800	1500	3150	300	700	1250
	X		600	1200	2100	4000	400	960	1750

NOTES

1. Set pressures are based upon valve discharge into an atmospheric pressure return line. If return line pressure is significantly higher than atmospheric pressure, then consult factory for capacity information.
2. For set pressures less than 10 psi (0.69 bar) consult the factory.

TYPE FRM WATER CAPACITY (GPM)

Set pressure[1], psig	Inlet size ¼ in. (8 mm)				Inlet size ⅜ in. (10 mm)			
	Rubber diaphragm		Metal diaphragm		Rubber diaphragm		Metal diaphragm	
	10% Rise	20% Rise	10% Rise	20% Rise	10% Rise	20% Rise	10% Rise	20% Rise
[2]10	0.2	0.7	0.1	0.5	0.2	0.7	0.1	0.5
25	0.5	1.2	0.5	1.0	0.5	1.2	0.5	1.0
50	1.2	2.5	0.7	1.7	1.2	2.5	0.7	1.7
100	2.1	3.5	1.4	3.0	2.1	3.5	1.4	3.0
150	2.5	4.8	1.5	4.0	2.5	4.8	1.5	4.0

TYPE FRM AIR CAPACITY (SCFM)

Set pressure[1], psig	Inlet size ¼ in. (8 mm)				Inlet size ⅜ in. (10 mm)			
	Rubber diaphragm		Metal diaphragm		Rubber diaphragm		Metal diaphragm	
	10% Rise	20% Rise	10% Rise	20% Rise	10% Rise	20% Rise	10% Rise	20% Rise
[2]10	0.5	1.5	0.3	0.9	0.5	1.5	0.3	0.9
25	2.1	6.5	1.2	4.0	2.1	6.5	1.2	4.0
50	5.0	16.0	2.6	9.5	5.0	16.0	2.6	9.5
100	12.0	25.0	6.5	15.0	12.0	25.0	6.5	15.0
150	16.0	35.0	11.5	25.0	16.0	35.0	11.5	25.0

NOTES

1. Set pressures are based upon valve discharge into an atmospheric pressure return line. If return line pressure is significantly higher than atmospheric pressure, then consult factory for capacity information.
2. For set pressures less than 10 psi (0.69 bar) consult the factory.

TYPE FRM-2 WATER CAPACITY (GPM)

Set pressure[1], psig	Inlet size ¼ in. (8 mm)				Inlet size ⅜ in. (10 mm)	
	Rubber diaphragm		Metal diaphragm		Rubber diaphragm	
	10% Rise	20% Rise	10% Rise	20% Rise	10% Rise	20% Rise
[2]10	0.5	1.0	0.3	0.7	0.5	1.0
25	0.7	1.7	0.7	1.2	0.7	1.7
50	1.5	3.5	1.0	2.0	1.5	3.5
100	2.7	5.0	2.0	4.0	2.7	5.0
150	3.7	7.5	2.5	5.5	3.7	7.5
200	4.5	8.5	3.0	6.5	4.5	8.5
250	5.5	10.0	4.0	8.0	5.5	10.0

TYPE FRM-2 WATER CAPACITY (GPM) (CONTINUED)

Set pressure[1], psig	Inlet size ⅜ in. (10 mm)		Inlet size ½ in. (15 mm)			
	Metal diaphragm		Rubber diaphragm		Metal diaphragm	
	10% Rise	20% Rise	10% Rise	20% Rise	10% Rise	20% Rise
[2]10	0.3	0.7	0.5	1.0	0.3	0.7
25	0.7	1.2	0.7	1.7	0.7	1.2
50	1.0	2.0	1.5	3.5	1.0	2.0
100	2.0	4.0	2.7	5.0	2.0	4.0
150	2.5	5.5	3.7	7.5	2.5	5.5
200	3.0	6.5	4.5	8.5	3.0	6.5
250	4.0	8.0	5.5	10.0	4.0	8.0

TYPE FRM-2 AIR CAPACITY (SCFM)

Set pressure[1], psig	Inlet size ¼ in. (8 mm)				Inlet size ⅜ in. (10 mm)	
	Rubber diaphragm		Metal diaphragm		Rubber diaphragm	
	10% Rise	20% Rise	10% Rise	20% Rise	10% Rise	20% Rise
[2]10	5.0	11.0	3.0	8.0	5.0	11.0
25	9.0	14.0	5.0	11.0	9.0	14.0
50	12.0	22.0	7.0	17.0	12.0	22.0
100	16.0	33.0	11.0	25.0	16.0	33.0
150	20.0	42.0	14.0	31.0	20.0	42.0
200	24.0	52.0	17.0	38.0	24.0	52.0
250	26.0	60.0	20.0	43.0	26.0	60.0

TYPE FRM-2 AIR CAPACITY (SCFM)

Set pressure[1], psig	Inlet size ¼ in. (8 mm)				Inlet size ⅜ in. (10 mm)	
	Rubber diaphragm		Metal diaphragm		Rubber diaphragm	
	10% Rise	20% Rise	10% Rise	20% Rise	10% Rise	20% Rise
[2]10	3.0	8.0	5.0	11.0	3.0	8.0
25	5.0	11.0	9.0	14.0	5.0	11.0
50	7.0	17.0	12.0	22.0	7.0	17.0
100	11.0	25.0	16.0	33.0	11.0	25.0
150	14.0	31.0	20.0	42.0	14.0	31.0
200	17.0	38.0	24.0	52.0	17.0	38.0
250	20.0	43.0	26.0	60.0	20.0	43.0

NOTES

1. Set pressures are based upon valve discharge into an atmospheric pressure return line. If return line pressure is significantly higher than atmospheric pressure, then consult factory for capacity information.
2. For set pressures less than 10 psi (0.69 bar) consult the factory.

STANDARD SPRING RANGES, psig (bar)

Type	Spring material	Size, in. (mm)	1	2	3	4	5	6	7
FR	Steel	½ (15)	0 to 25 (0 to 1.7)	25 to 45 (1.7 to 3.1)	5 to 50 (0.3 to 3.4)	30 to 100 (2.1 to 6.9)	75 to 175 (5.2 to 12.1)	150 to 400 (10.3 to 27.6)	----
		¾ (20)	0 to 10 (0 to 0.69)	5 to 20 (0.34 to 1.4)	10 to 50 (0.69 to 3.4)	20 to 110 (1.4 to 7.6)	30 to 200 (2.1 to 13.8)	100 to 250 (6.9 to 17.2)	150 to 400 (10.3 to 27.6)
		1 (25)	0 to 20 (0 to 1.4)	10 to 35 (0.69 to 2.4)	20 to 90 (1.4 to 6.2)	40 to 125 (2.8 to 8.6)	50 to 230 (3.4 to 15.9)	175 to 380 (12.5 to 26.2)	300 to 400 (20.7 to 27.6)
		1¼ (32)	0 to 15 (0 to 1.0)	10 to 30 (0.69 to 2.1)	20 to 85 (1.4 to 5.9)	50 to 230 (3.4 to 15.9)	175 to 380 (12.5 to 26.2)	300 to 400 (20.7 to 27.6)	----
		1½, 2 (40, 50)	0 to 10 (0 to 0.69)	5 to 20 (0.34 to 1.4)	10 to 55 (0.69 to 3.8)	30 to 100 (2.1 to 6.9)	40 to 200 (2.8 to 13.8)	125 to 300 (8.6 to 20.7)	200 to 400 (13.8 to 27.6)
	SST	½ (15)	0 to 20 (0 to 1.4)	10 to 50 (0.69 to 3.4)	40 to 90 (2.8 to 6.2)	75 to 200 (5.2 to 13.8)	100 to 300 (6.9 to 20.7)	100 to 400 (6.9 to 27.6)	----
		¾ (20)	0 to 10 (0 to 0.69)	0 to 15 (0 to 1.0)	10 to 70 (0.69 to 4.8)	50 to 175 (3.4 to 12.1)	100 to 265 (6.9 to 18.3)	----	----
		1 (25)	0 to 15 (0 to 1.0)	10 to 35 (0.69 to 2.4)	20 to 75 (1.4 to 5.2)	40 to 200 (2.8 to 13.8)	50 to 250 (3.4 to 17.2)	----	----
		1¼ (32)	0 to 15 (0 to 1.0)	10 to 30 (0.69 to 2.1)	20 to 85 (1.4 to 5.9)	40 to 125 (2.8 to 8.6)	50 to 250 (3.4 to 17.2)	----	----
		1½, 2 (40, 50)	0 to 15 (0 to 1.0)	5 to 20 (0.34 to 1.4)	10 to 55 (0.69 to 3.8)	30 to 100 (2.1 to 6.9)	40 to 160 (2.8 to 11.0)	100 to 250 (6.9 to 17.2)	----

STANDARD SPRING RANGES, psig (bar)

Type	Spring material	Size, in. (mm)	1
FR-6	Steel	All sizes	200 to 600 (13.8 to 41.4)
	SST	½ (15)	200 to 600 (13.8 to 41.4)
		¾, 1, 1¼, 1½, 2 (20, 25, 32, 40, 50)	200 to 400 (13.8 to 27.6)

STANDARD SPRING RANGES, psig (bar)

Type	Spring material	Size, in. (mm)	1	2	3	4	5
FR-10	Steel	½ (15)	0 to 25 (0 to 1.7)	5 to 50 (0.34 to 3.4)	30 to 100 (2.1 to 6.9)	75 to 175 (5.2 to 12.1)	100 to 250 (6.9 to 17.2)
		¾ (20)	0 to 10 (0 to 0.69)	10 to 50 (0.69 to 3.4)	20 to 110 (1.4 to 7.6)	30 to 200 (2.1 to 13.8)	100 to 250 (6.9 to 17.2)
		1, 1¼ (25, 32)	0 to 20 (0 to 1.4)	20 to 90 (1.4 to 6.)	40 to 125 (2.8 to 8.6)	50 to 250 (3.4 to 17.2)	----
		1½, 2 (40, 50)	0 to 10 (0 to 0.69)	10 to 55 (0.69 to 3.8)	30 to 100 (2.1 to 6.9)	40 to 200 (2.8 to 13.8)	125 to 250 (8.6 to 17.2)
	SST	½ (15)	0 to 20 (0 to 1.4)	10 to 50 (0.69 to 3.4)	40 to 90 (2.8 to 6.2)	75 to 200 (5.2 to 13.8)	100 to 250 (6.9 to 17.2)
		¾ (20)	0 to 10 (0 to 0.69)	10 to 70 (0.69 to 4.8)	50 to 175 (3.4 to 12.1)	100 to 250 (6.9 to 17.2)	----
		1, 1¼ (25, 32)	0 to 15 (0 to 1.0)	10 to 75 (0.69 to 5.2)	40 to 200 (2.8 to 13.8)	50 to 250 (3.4 to 17.2)	----
		1½, 2 (40, 50)	0 to 15 (0 to 1.0)	10 to 55 (0.69 to 3.8)	30 to 100 (2.1 to 6.9)	40 to 160 (2.8 to 11.0)	100 to 250 (6.9 to 17.2)

STANDARD SPRING RANGES, psig (bar)

Type	Spring material	1	2	3	4	5	6	7	8	9
FRM	Steel	1 to 2 (0.07 to 0.14)	2 to 15 (0.14 to 1.0)	2 to 30 (0.14 to 2.1)	10 to 50 (0.69 to 3.4)	40 to 90 (2.8 to 6.2)	40 to 125 (2.8 to 8.6)	75 to 175 (5.2 to 12.1)	----	----
FRM	SST	2 to 25 (0.14 to 1.7)	15 to 65 (1.0 to 4.5)	40 to 100 (2.8 to 6.9)	50 to 150 (3.4 to 10.3)	75 to 175 (5.2 to 12.1)	100 to 250 (6.9 to 17.2)	200 to 400 (13.8 to 27.6)	200 to 600 (13.8 to 41.4)	300 to 600 (20.7 to 41.4)
FRM2		0 to 30 (0 to 2.1)	20 to 50 (1.4 to 3.5)	40 to 80 (2.8 to 5.5)	75 to 150 (5.2 to 10.3)	100 to 275 (6.9 to 19.0)	200 to 400 (13.8 to 27.6)	300 to 600 (20.7 to 41.4)	----	----

SELECTION GUIDE

Example:	FR-	Z	A	W	T	C	Z	Z	B	S	01	-	D	1

Model

FR6	Type FR-6
FR1	Type FR-10
FR-	Type FR

Material of construction

Z	Bronze (Types FR, FR-6)	**G**	316 SST (Types FR, FR-6)
F	Iron (Types FR, FR-10)		

Valve size

C	½ in. (15 mm)	**F**	1 ¼ in. (32 mm)
D	¾ in. (20 mm)	**G**	1 ½ in. (40 mm)
E	1 in. (25 mm)	**H**	2 in. (50 mm)

Service

W	Water/air service

Body/connection style

S	2 side inlets/bottom outlet - w/NPT connections (Standard)
B	2 side inlets/bottom outlet - w/BSPT connections (Special)
E	1 side inlet/bottom outlet - w/NPT connections (standard body with one side plugged)

Spring chamber style

S	Standard
C	W/pressure screw cap
D	W/pressure screw cap and differential connection
V	Vented

Spring chamber material

Z	Bronze	**G**	316 Stainless steel
F	Iron		

Diaphragm material

B	NBR	**M**	Monel®
Z	Bronze (Types FR and FR-6 only)	**V**	FKM (Type FR10 only)
G	316 SST (Types FR and FR-6 only)	**L**	NBR w/ PTFE diaphragm liner

Body seat material

E	303 Stainless steel	**Z**	Brass
G	316 Stainless steel		

Pressure screw style

S	Standard	**T**	T-handle

Variation

01	Standard (303 Stainless steel trim) (elastomer diaphragms only)
02	303 Stainless steel trim w/NBR O-ring and Aramid fiber diaphragm gasket (metal diaphragms only)
03	303 Stainless steel trim w/PTFE O-ring and Aramid fiber diaphragm gasket (metal diaphragms only)
04	303 Stainless steel trim w/PTFE O-ring and PTFE diaphragm gasket (metal diaphragms only) (Type FR-10 has PTFE diaphragm liner in place of gasket)
05	303 Stainless Steel Trim w/ FKM O-Ring & Aramid fiber diaphragm gasket (metal diaphragms only)
11	316 Stainless steel trim (elastomer diaphragms only)
12	316 Stainless steel trim w/NBR O-ring and Aramid fiber diaphragm gasket (metal diaphragms only)
13	316 Stainless steel trim w/PTFE O-ring and Aramid fiber diaphragm gasket (metal diaphragms only)
14	316 Stainless steel trim w/PTFE O-ring and PTFE diaphragm gasket (metal diaphragms only) (Type FR-10 has PTFE diaphragm liner in place of gasket)
15	316 Stainless Steel Trim w/FKM O-ring & Aramid fiber diaphragm gasket (metal diaphragms only)
31	Nitralloy trim (elastomer diaphragms only)
32	Nitralloy trim w/NBR O-ring and Aramid fiber diaphragm gasket (metal diaphragms only)

Design revision

(-)	Indicates original design

Spring material

D	Carbon steel (water/air)	**E**	Stainless steel (optional)

Spring range

Refer to tables on page 13

SELECTION GUIDE

Example:	FRM-	A	W	Z	S	Z	S	B	F	02	-	D	1

Model
- **FRM-** FRM
- **FRM2** FRM-2

Size
- **A** ¼ in. (8 mm)
- **B** ⅜ in. (10 mm)
- **C** ½ in. (15 mm) (Type FRM-2 only)

Service
- **W** Water/air/oil/gas

Material of construction
- **Z** Brass
- **G** 316 SST

Body/connection style
- **S** Side inlet/side outlet NPT
- **R** 2 side inlets/bottom outlet NPT
- **E** Side inlet/bottom outlet NPT

Spring chamber material
- **A** Aluminum spring chamber (Type FRM only)
- **Z** Brass spring chamber
- **C** Chrome-plated brass

Spring chamber style
- **S** Standard
- **C** Cap (Type FRM-2 only)
- **W** Without vent hole

Diaphragm material
- **B** NBR
- **N** Neoprene
- **V** FKM
- **G** 316 Stainless steel
- **Z** Bronze

Pressure screw style
- **F** Fillister (FRM only)
- **H** Hex
- **Q** Square head (Steel for Water/Air service only)

Variation
- **01** Standard (303 Stainless steel trim) (elastomer diaphragms only)
- **02** 303 Stainless steel trim w/Aramid fiber diaphragm gasket (metal diaphragms only)
- **03** 303 Stainless steel trim w/PTFE diaphragm gasket (metal diaphragms only)
- **05** 303 Stainless steel trim w/Nylon inserted locknut
- **11** 316 Stainless steel trim (elastomer diaphragms only)
- **12** 316 Stainless steel trim w/Aramid fiber diaphragm gasket (metal diaphragms only)
- **13** 316 Stainless steel trim w/PTFE diaphragm gasket (metal diaphragms only)
- **21** Monel® trim (elastomer diaphragms only)
- **22** Monel® trim w/Aramid fiber diaphragm gasket (metal diaphragms only)
- **23** Monel® trim w/PTFE diaphragm gasket (metal diaphragms only)
- **31** Brass body w/SST body seat
- **32** Remote sensing
- **UL** UL approved

Design revision
- **(-)** Original design

Spring material
- **D** Carbon steel (industrial or final line gas service only)
- **E** Stainless steel (Type FRM-2 only)

Spring range

Refer to table on page 13

Monel® is a mark owned by Special Metals Corporation

CASH VALVE™ CP SERIES COMPRESSOR PILOT VALVES

Pilot valves for use in rotary screw compressors to control receiver pressure or compressor discharge pressure

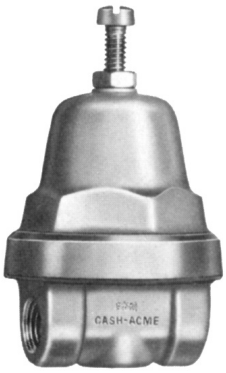

Type CP

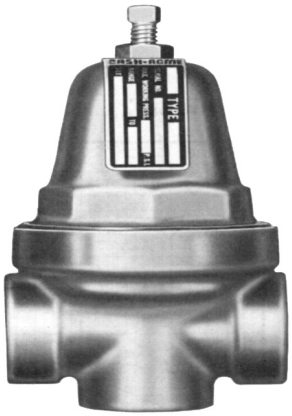

Type CP2

FEATURES

- Contribute to significant energy savings.
- Lead to quieter compressor operation and reduced wear.
- Brass body and spring chamber, stainless steel seat, phosphor bronze diaphragm, fiber gaskets as standard.
- Type CP2 has a larger seat for increased capacity.
- Vacuum service and reverse acting models available.
- Choice of side inlet/side outlet, side inlet/bottom outlet or side inlet/side outlet/bottom outlet configurations.
- Suitable for adaptation to specialized compressor designs.

GENERAL APPLICATION

The pilot valve regulates the air pressure to a cylinder or diaphragm which positions the control device in the compressor suction line and/or the speed control on engine-driven units. Also for maintaining compressor lube oil circulation.

TECHNICAL DATA[1]

Materials:	Brass, 316 stainless steel
Sizes:	¼, ⅜, ½ in. (8, 10, 15 mm)
Connections:	NPTF
Pressure range:	0 to 600 psig (0 to 41.4 barg)
Temperature range:	-40 to 180°F (-40 to 82°C)

1. Refer to General Specifications Table in page 2 for more information.

© 2017 Emerson. All Rights Reserved.

CASH VALVE™ CP SERIES COMPRESSOR PILOT VALVES

GENERAL SPECIFICATIONS

Type	Body Material	Spring Chamber Material	Body Size, in. (mm)	Materials		Maximum Inlet Pressure, psig (barg)	Maximum Outlet Pressure, psig (barg)	Temperature Range, °F (°C)
				Diaphragm	Spring			
CP	Brass or 316 SST	Brass or Aluminum	¼ (8)	Bronze	SST or Steel	600 (41.4)	600 (41.4)	-40 to 180°F (-40 to 82°C)
CP2	Brass or 316 SST	Brass or 316 SST	¼ (8)	Bronze	SST	600 (41.4)	600 (41.4)	-40 to 180°F (-40 to 82°C)
	Brass	Brass	⅜, ½ (10, 15)	Bronze	SST	600 (41.4)	600 (41.4)	-40 to 180°F (-40 to 82°C)
CPR	Brass	Brass or Aluminum	¼ (8)	Bronze	SST	600 (41.4)	600 (41.4)	-40 to 180°F (-40 to 82°C)

STANDARD SPRING RANGES, psig (barg)

Type	Spring material	Size, in. (mm)	1	2	3	4	5	6	7
CP	SST	¼ (8)	15 to 65 (1.0 to 4.5)	40 to 100 (2.8 to 6.9)	75 to 175 (5.2 to 12.1)	100 to 250 (6.9 to 17.2)	200 to 400 (13.8 to 27.6)	200 to 600 (13.8 to 41.4)	300 to 600 (20.7 to 41.4)
	Steel	¼ (8)	40 to 90 (2.8 to 6.2)	40 to 125 (2.8 to 8.6)	75 to 175 (5.2 to 12.1)	- - - -	- - - -	- - - -	- - - -
CPR	SST	¼ (8)	100 to 150 (6.9 to 10.3)	75 to 175 (5.2 to 12.1)	100 to 250 (6.9 to 17.2)	140 to 200 (9.7 to 13.8)	200 to 450 (13.8 to 31.0)	300 to 600 (20.7 to 41.4)	- - - -
CP2	SST	¼ to ½ (8 to 15)	0 to 30 (0 to 2.1)	40 to 80 (2.8 to 5.5)	80 to 150 (5.5 to 10.3)	50 to 275 (3.4 to 19.0)	100 to 275 (6.9 to 19.0)	200 to 400 (13.8 to 27.6)	300 to 600 (20.7 to 41.4)

MATERIALS OF CONSTRUCTION

Part description	Materials
Adjusting screw cap	SST
Handwheel	Steel or plastic
Body	Brass or 316 SST
Spring chamber	Brass, Aluminum[1], 316 SST
Adjusting spring	SST or steel
Pressure plate	Brass
Diaphragm	Bronze
Diaphragm gasket	Aramid fiber or Polytetrafluoroethylene (PTFE)
Seat ring	SST
Ball seat	SST

1. Available for Types CP and CPR only.

DIMENSIONS

Type	Size, in. (mm)	Connections	Dimensions, in. (mm)			Shipping weight, lbs (kg)
			A	B	C	
CP	¼ (8)	Side inlet; side or bottom outlet	3.33 (84.5)	0.44 (11.2)	2.26 (57.4)	1.13 (0.51)
CPR	¼ (8)		3.13 (79.4)	0.69 (17.6)	2.26 (58.3)	- - - -
CP2	¼ (8)		4.75 (121)	0.75 (19.1)	2.69 (68.3)	2.50 (1.13)
	⅜ (10)		4.50 (114)	0.75 (19.1)	2.69 (68.3)	2.50 (1.13)
	½ (15)		4.75 (121)	1.28 (32.5)	2.69 (68.3)	- - - -

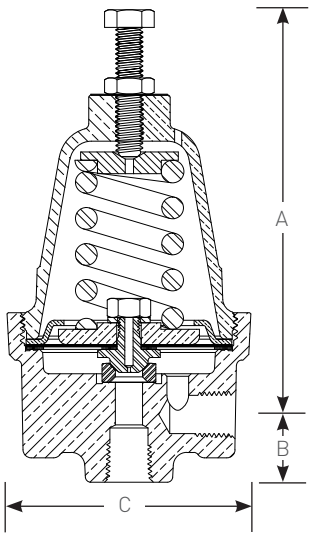

OPERATION

These valves provide a regulated output pressure that increases at a pre-determined rate as the receiver or compressor discharge pressure increases above the pilot's pressure setting. The pilot is provided to increase the pressure, in straight line fashion, on a ratio of 1 to 1, 2 to 1; or whatever ratio or differential control is required for proper compressor functioning.

For example, if the pilot is to start to open when receiver pressure reaches 100 psi (6.9 bar) and the pilot is operating with a 2 to 1 ratio: the pilot output pressure is 0 psi. On 10 psi (0.7 bar) increase, the pilot will provide a controlled discharge pressure from 0 to 20 psi (0 to 1.4 bar) as the compressor increases from 100 to 110 psi (6.9 to 7.6 bar).

FIGURE 1

Performance graph

This graph illustrates the linear output of the Types CP and CP2 valves for a given set point and a variety of ratios and is given in 0.5 psi (0.03 bar) increments.

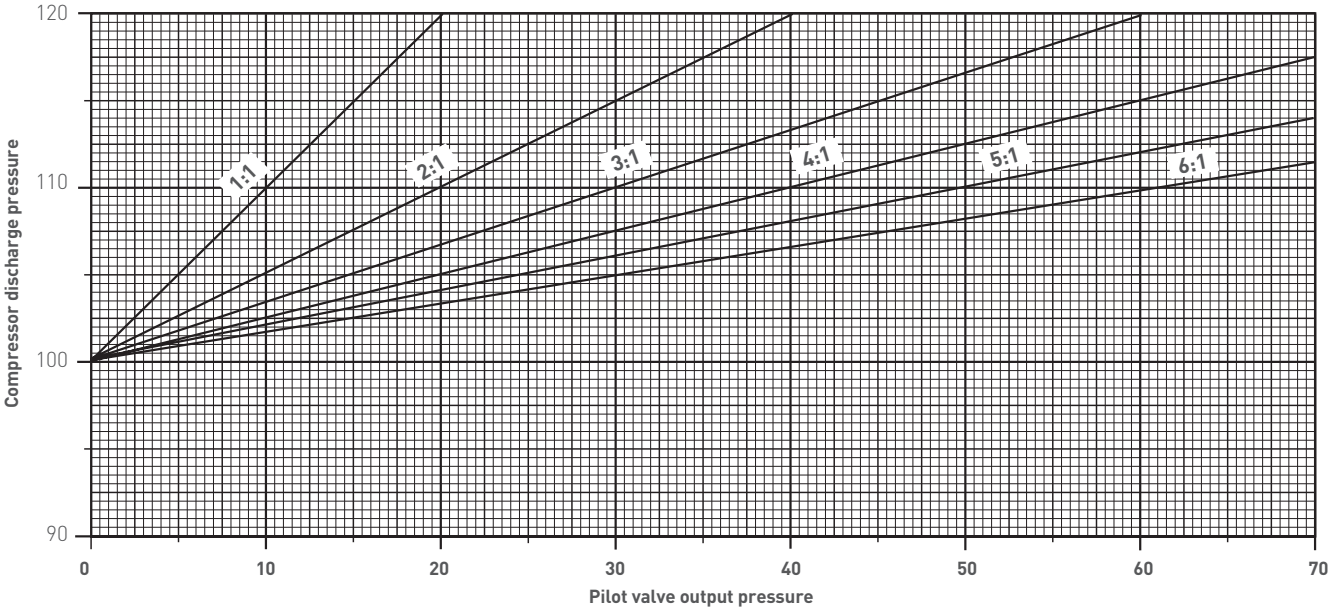

FIGURE 2

Typical rotary screw compressor system schematic

NB: greatly simplified. For specific application details, consult the factory.

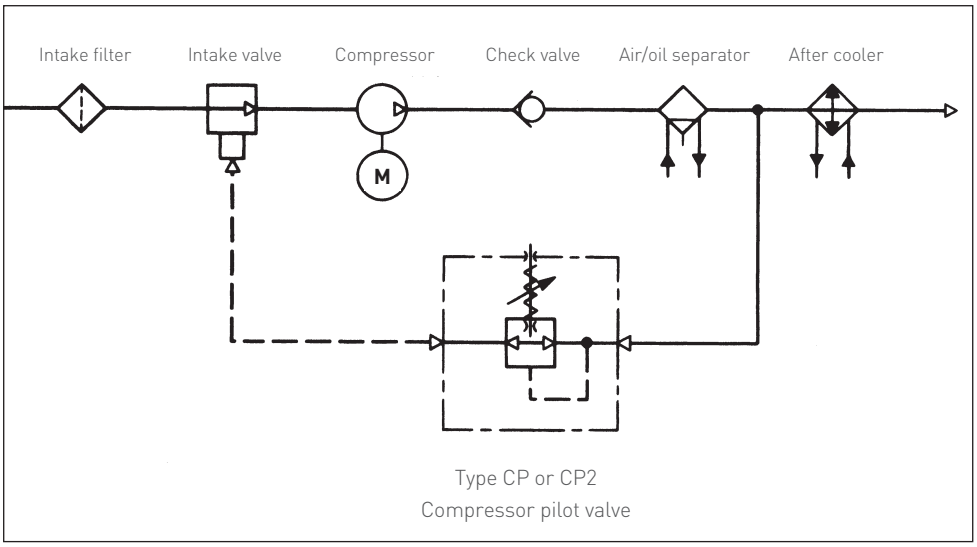

Specialized designs

Type CP and CP2 Pilots are suitable for adaptation to specialized compressor designs.

For application in special designs, consult your local representative.

SELECTION GUIDE

Example:	CP-	Z	A	S	S	010	Z	F	–	01	D	1

Type

CP-	Type CP valve	**CPV**	Type CPV valve (vacuum)
CP2	Type CP2 valve	**CPR**	Type CP valve reverse acting

Body material

Z	Brass
G	SST (Types CP, CP2 in size ¼ in. only)

Valve size

A	¼ in. (8 mm)	**C**	½ in. (15 mm) (Type CP2 only)
B	⅜ in. (10 mm) (Type CP2 only)		

Connection type

S	Side inlet - side outlet (SI-SO)	**D**	Side inlet - side outlet - bottom outlet (SI-SO-BO)
B	Side inlet - bottom outlet (SI-BO)		

Options

S	Standard	**P**	Panel mount
M	Mounting thread in body	**N**	No bleed orifice (reverse action only)
C	Clean out plug (SI-SO-BO only)		

Output ratio

010	1.0 to 1 (Types CP or CP2)	**023**	2.3 to 1 (Type CP2)	**038**	3.8 to 1 (Type CP2)	**114**	11.4 to 1 (Type CP2)
011	1.1 to 1 (Types CP or CP2)	**025**	2.5 to 1 (Type CP)	**041**	4.1 to 1 (Type CP)	**135**	13.5 to 1 (Type CP)
013	1.3 to 1 (Type CP)	**027**	2.7 to 1 (Type CP)	**044**	4.4 to 1 (Type CP)	**216**	21.6 to 1 (Type CP2)
016	1.6 to 1 (Type CP2)	**028**	2.8 to 1 (Type CP2)	**050**	5.0 to 1 (Type CP2)	**RVA**	Reverse action (Type CPR)
017	1.7 to 1 (Type CP)	**032**	3.2 to 1 (Type CP2)	**052**	5.2 to 1 (Type CP)	**VAC**	Vacuum (Type CPV)
018	1.8 to 1 (Type CP)	**033**	3.3 to 1 (Type CP)	**074**	7.4 to 1 (Type CP)		
020	2.0 to 1 (Type CP)	**035**	3.5 to 1 (Type CP)	**105**	10.5 to 1 (Type CP2)		

Spring chamber

A	Aluminum (Types CP, CPV, CPR only)	**G**	316 SST (Type CP2 in size ¼ in. only)
Z	Brass		

Adjusting screw

F	Fillister head (Types CP, CPR, CPV only)	**T**	T-handle (requires option for panel mount) (Type CP2 only)
H	Hex head (Type CP only)	**W**	Handwheel (requires option for panel mount) (Type CP only)

Design revision

(-)	Original design

Variation

01	Catalog standard
02	PTFE gaskets

Spring material

D	Steel
E	SST

Set pressure

Refer to table on page 2

CASH VALVE™ K SERIES BACK PRESSURE VALVES

High capacity angle bypass regulators or back pressure control valves with models
(.for pressures to 1500 psig (103.4 barg) and capacities to 200 gallons per minute (757 l/min

FEATURES

- Rugged, simple design enables complete disassembly on-line for easy maintenance and repair.
- Smooth, quiet performance.
- Fitted with female threaded connections, bottom inlet, side outlet; valves may be operated in any position.
- Closing cap over the top adjusting screw discourages unauthorized tampering with the set pressure and seals against leakage.
- Can be used to maintain a constant pressure differential.
- Type K5C fitted with a silicone rubber seat disc to provide tight shut-off.
- Type K10 balanced piston design is substantially unaffected by pressures or pressure changes in the outlet lines, assuring constant control over pump discharge pressure.
- Types K10 and K15 feature a long pressure spring to provide maximum sensitivity.
- Type K15 has a replaceable stainless steel seat and piston providing longer valve life at minimal cost.

GENERAL APPLICATION

The K Series Back Pressure Valves are available for use on pump systems with water and other fluids, especially oil of all grades; hydraulic systems, oil burning equipment, rams, presses and lifts, chemicals processes, waste treatment, desalination and car washes.

TECHNICAL DATA[1]

Materials:	Bronze
Sizes:	¼ to 2 in. (7 to 50 mm)
Connections:	NPTF
Pressure range:	2 to 1500 psig (0.1 to 103.4 barg)
Temperature range:	-50 to 450°F (-46 to 232°C)

1. Refer to General Specifications Table in page 2 for more information.

.Emerson. All Rights Reserved 2017 ©

CASH VALVE™ K SERIES BACK PRESSURE VALVES

MODELS OVERVIEW

K Series valves are high capacity angle bypass regulators or back pressure control valves with a bottom inlet and side outlet. System pressure to be regulated is connected to the bottom inlet. Excess flow that is to be returned to the tank, pump suction or simply piped to a drain is connected to the side outlet.

There is a choice of four models suitable for specific duties:
Types K5 and K5C are available in 1, 1¼, 1½ and 2 in. (25, 32, 38 and 50 mm) sizes and designed for systems with a maximum operating temperature of 300°F (149°C) that require pressure control from 2 to 150 psig (0.1 to 10.3 barg).

Type K5C differs from Type K5 as it is fitted with a silicone rubber seat disc rather than a metal seat to provide for applications where tight shut-off is required.

They are suitable for pump systems of all kinds, applicable on water, other fluids and especially oils of all grades.

Type K10 valves are totally enclosed and physically small with a balanced piston design. They are available in ¼, ⅜, ½, ¾, 1 and 1¼ in. (6, 10, 13, 19, 25 and 32 mm) sizes and are designed for systems which require pressure control from 15 to 600 psig (1.0 to 41.4 barg). Maximum system temperature is 450°F (232°C).

They are suitable for water, other liquids and light fuel oils and are especially well suited for use on hydraulic systems of all kinds, such as pumping units on a machine tool hydraulic mechanism and for any system requiring automatic regulation of a pump discharge pressure.

The Type K15 is a small, compact piston-type back pressure valve available in ¼, ⅜, ½ and ¾ in. (6, 10, 13 and 19 mm) sizes and is designed for systems which require pressure control from 25 to 1500 psig (1.7 to 103.4 barg) with maximum temperatures of 450°F (232°C).

It is suitable for water or other liquids and light fuel oil and is especially suited for bypass applications on high pressure pumps or any system requiring automatic regulation of a pump discharge pressure.

TYPE K5

TYPE K10

TYPE K15

GENERAL SPECIFICATIONS

Type	Body Material	Spring Chamber Material	Body Size, in. (mm)	Materials		Maximum Inlet Pressure, psig (barg)	Temperature Range, °F (°C)
				Spring	Seat (Disc)		
K5	Bronze	Bronze	1 to 2 (25 to 50)	SST	Brass	150 (10.3)	-50 to 300 (-46 to 149)
K5C	Bronze	Bronze	1 to 2 (25 to 50)	SST	Brass or silicone	150 (10.3)	-50 to 300 (-46 to 149)
K10	Bronze	Brass	¼ to 1¼ (8 to 32)	SST	Brass	600 (41.4)	-50 to 450 (-46 to 232)
	Bronze	Asperated Piston	1¼ (32)	SST	Asperated piston	600 (41.4)	-50 to 450 (-46 to 232)
K15	Bronze	Brass	¼ to ¾ (8 to 20)	SST	Brass	1500 (103.4)	-50 to 450 (-46 to 232)

TYPES K5 AND K5C DIRECT-ACTING ANGLE BACK PRESSURE VALVES

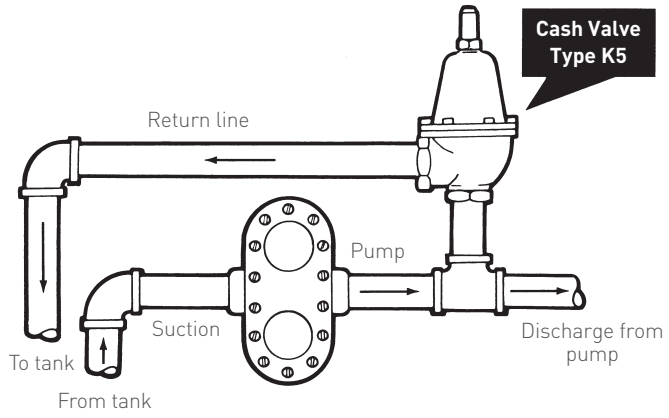

TYPICAL INSTALLATION

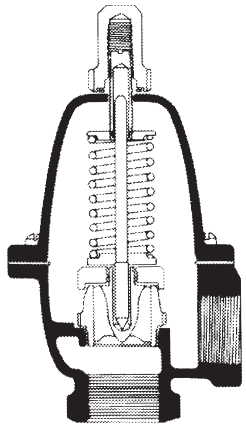

TYPE K5 INTERIOR

Construction/specifications

Types K5 and K5C incorporate bronze bodies and internal trim, a brass spring chamber, stainless steel adjustment spring and high temperature gaskets.

STANDARD SPRING RANGES, psig (barg)

Type	Size, in. (mm)	1	2	3	4
K5, K5C	1 (25)	2 to 10 (0.1 to 0.7)	5 to 20 (0.3 to 1.4)	15 to 65 (1.0 to 4.5)	60 to 150 (4.1 to 10.3)
	1¼ (32)	5 to 35 (0.3 to 2.4)	30 to 75 (2.1 to 5.2)	70 to 150 (4.8 to 10.3)	- - - -
	1½ (38)	5 to 30 (0.3 to 2.1)	25 to 70 (1.7 to 4.8)	65 to 150 (4.5 to 10.3)	- - - -
	2 (50)	5 to 20 (0.3 to 1.4)	15 to 70 (1.0 to 4.8)	65 to 150 (4.5 to 10.3)	- - - -

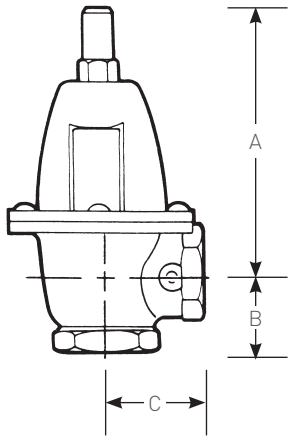

TYPE K5 DIMENSIONS

Size, in. (mm)	Dimensions, in. (mm)			Shipping weight, lbs (kg)
	A	B	C	
1 (25)	5.62 (143)	1.50 (38.1)	2.00 (50.8)	4⅛ (1.87)
1¼ (32)	6.59 (167)	1.78 (45.2)	2.44 (61.9)	8 (3.63)
1½ (38)	6.69 (170)	2.00 (50.8)	2.50 (63.5)	8 (3.63)
2 (50)	7.56 (190)	2.25 (57.2)	3.00 (76.2)	14 (6.35)

TYPES K5 AND K5C WATER CAPACITY INFORMATION (GPM)

Set pressure[1], psig	Inlet size, in. (mm)							
	1 (25)		1¼ (32)		1½ (38)		2 (50)	
	10% Rise	20% Rise	10% Rise	20% Rise	10% Rise	20% Rise	10% Rise	20% Rise
10	21	24	28	35	32	40	38	60
15	26	32	38	44	43	52	52	76
20	29	37	48	57	53	68	60	94
30	34	45	58	67	63	76	78	110
40	38	50	70	78	74	92	86	122
50	40	53	76	86	82	102	94	132
60	43	56	82	98	88	116	102	140
75	48	63	88	107	98	128	118	158
100	52	67	102	120	106	140	136	176
125	56	70	108	128	116	160	152	188
150	60	72	118	138	124	170	184	200

1. Set pressures are based upon valve discharge into an atmospheric pressure return line. If return line pressure is significantly higher than atmospheric pressure, then consult factory for capacity information.

TYPE K10 PISTON-TYPE ANGLE BACK PRESSURE VALVE

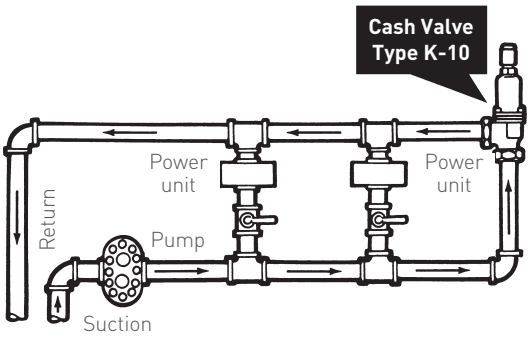

TYPE K-10 INSTALLED AT END OF PUMPING CIRCUIT TO MAINTAIN CIRCULATION THROUGH ENTIRE LOOP

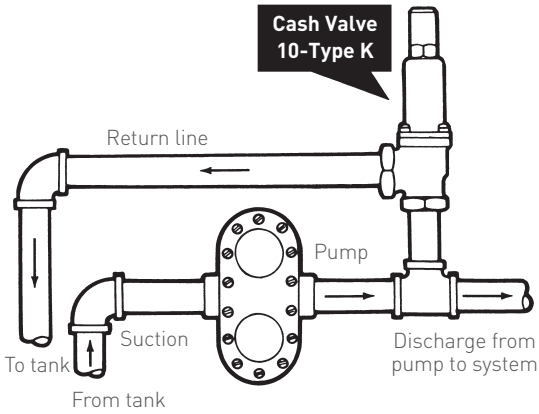

TYPICAL HOOK UP AS PUMP BY-PASS

TYPE K10 INTERIOR

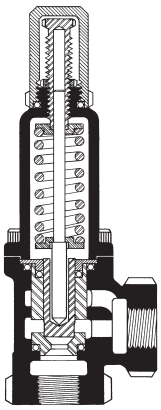

Construction/specifications

The Type K10 valve incorporates a brass closing cap, a stainless steel pressure spring, a heavy bronze body, stainless steel trim and single seat.

STANDARD SPRING RANGES, psig (barg)

Type	Size, in. (mm)	1	2	3	4	5
K10	¼, ⅜ (6, 10)	15 to 30 (1.0 to 2.1)	25 to 75 (1.7 to 5.2)	50 to 140 (3.4 to 9.7)	100 to 300 (6.9 to 20.7)	200 to 600 (13.8 to 41.4)
	½, ¾ (13, 19)	15 to 75 (1.0 to 5.2)	50 to 150 (3.4 to 10.3)	100 to 300 (6.9 to 20.7)	200 to 600 (13.8 to 41.4)	- - - -
	1, 1¼ (25, 32)	15 to 75 (1.0 to 5.2)	50 to 150 (3.4 to 10.3)	100 to 300 (6.9 to 20.7)	200 to 600 (13.8 to 41.4)	- - - -
	¼, ⅜ (6, 10)[1]	15 to 75 (1.0 to 5.2)	50 to 150 (3.4 to 10.3)	- - - -	- - - -	- - - -

1. For McMaster Carr variation.

TYPE K10 DIMENSIONS

Size, in. (mm)	Dimensions, in. (mm)			Shipping weight, lbs (kg)
	A	B	C	
¼ (6)	4.25 (108)	0.97 (24.6)	1.25 (31.7)	1¼ (0.57)
⅜ (10)	4.25 (108)	0.97 (24.6)	1.25 (31.7)	1¼ (0.57)
½ (13)	5.63 (143)	1.38 (35.0)	1.94 (49.3)	4 (1.81)
¾ (19)	5.63 (143)	1.38 (35.0)	1.94 (49.3)	4½ (2.04)
1 (25)	7.88 (200)	1.88 (47.7)	2.25 (57.1)	8½ (3.86)
1¼ (32)	7.88 (200)	1.88 (47.7)	2.25 (57.1)	9 (4.08)

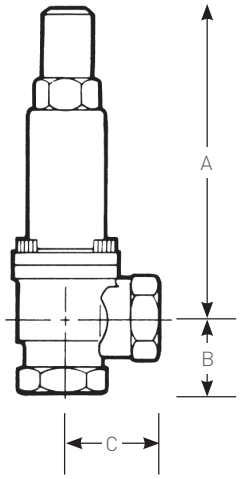

TYPE K10 WATER CAPACITY INFORMATION (GPM)

Set pressure[1], psig	Inlet size, in. (mm)							
	¼ (6)		⅜ (10)		½ (13)		¾ (19)	
	10% Rise	20% Rise	10% Rise	20% Rise	10% Rise	20% Rise	10% Rise	20% Rise
15	1.0	2.5	1.0	2.5	1.5	3.5	1.5	3.5
20	1.5	4.0	1.5	4.0	2.5	5.0	2.5	5.0
30	2.5	6.0	2.5	6.0	3.5	7.0	3.5	7.0
50	3.0	9.0	3.0	9.0	5.0	11.0	5.0	11.0
75	3.5	11.0	3.5	11.5	6.0	14.0	6.0	14.0
100	4.0	11.5	4.0	14.5	7.0	15.0	7.0	17.0
125	4.5	11.5	4.5	17.0	7.5	16.0	7.5	19.0
150	5.0	11.5	5.0	19.5	8.0	22.0	8.0	22.0
200	5.5	11.5	5.5	20.0	9.0	24.0	9.0	24.0
250	6.0	11.5	6.0	20.0	9.7	26.0	9.7	26.0
300	7.0	11.5	7.0	20.0	10.5	28.0	10.5	28.0
400	8.0	11.5	8.0	20.0	11.5	30.0	11.5	31.5
600	10.0	11.5	10.0	20.0	14.5	30.0	14.5	37.0

TYPE K10 WATER CAPACITY INFORMATION (GPM) (CONTINUED)

Set pressure[1], psig	Inlet size, in. (mm)			
	1 (25)		1¼ (32)	
	10% Rise	20% Rise	10% Rise	20% Rise
15	3.0	6.0	3.0	6.0
20	4.0	8.0	4.0	8.0
30	5.0	12.0	5.0	12.0
50	6.5	17.5	6.5	17.5
75	8.5	23.5	8.5	23.5
100	10.0	27.0	10.0	27.0
125	11.5	30.0	11.5	30.0
150	13.0	34.0	13.0	34.0
200	15.0	40.0	15.0	40.0
250	17.0	47.0	17.0	47.0
300	19.0	54.0	19.0	54.0
400	23.0	63.0	23.0	63.0
600	28.0	65.0	28.0	77.0

1. Set pressures are based upon valve discharge into an atmospheric pressure return line. If return line pressure is significantly higher than atmospheric pressure, then consult factory for capacity information.

TYPE K15 HIGH PRESSURE PISTON-TYPE BACK PRESSURE VALVE

Construction/specifications

The Type K15 features a replaceable stainless steel seat and piston providing longer valve life atminimal cost and incorporates a long, sensitive adjustment spring.

TYPE K15 INTERIOR

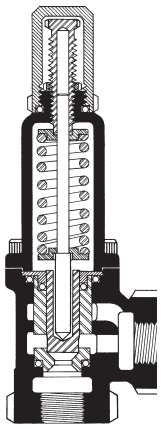

STANDARD SPRING RANGES, psig (barg)

Type	Size, in. (mm)	1	2	3	4	5
K15	¼, ⅜ (6, 10)	25 to 75 (1.7 to 5.2)	20 to 150 (1.4 to 10.3)	100 to 300 (6.9 to 20.7)	150 to 800 (10.3to 55.2)	600 to 1500 (41.4 to 103.4)
	½, ¾ (13, 19)	25 to 150 (1.7 to 10.3)	20 to 200 (1.4 to 13.8)	100 to 700 (6.9 to 48.3)	600 to 1500 (41.4 to 103.4)	- - - -

TYPE K15 DIMENSIONS

Size, in. (mm)	Dimensions, in. (mm)			Shipping weight, lbs (kg)
	A	B	C	
¼ (6)	4.25 (108)	0.97 (24.6)	1.25 (31.7)	1⅜ (0.62)
⅜ (10)	4.25 (108)	0.97 (24.6)	1.25 (31.7)	1⅜ (0.62)
½ (13)	5.63 (143)	1.38 (35.0)	1.63 (41.4)	3 (1.36)
¾ (19)	5.63 (143)	1.38 (35.0)	1.63 (41.4)	3 (1.36)

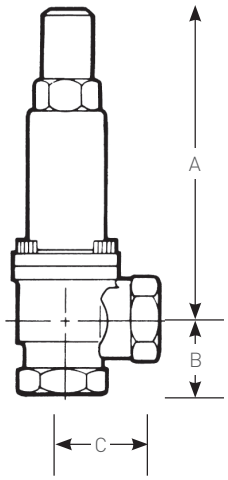

(TYPE K15 WATER CAPACITY INFORMATION (GPM

Set pressure[1], psig	(Inlet size, in. (mm							
	(6) ¼		(10) ⅜		(13) ½		(19) ¾	
	Rise 10%	Rise 20%	Rise 10%	Rise 20%	Rise 10%	Rise 20%	Rise 10%	Rise 20%
25	0.5	1.0	0.5	1.0	0.7	1.3	0.7	1.3
50	0.6	1.3	0.6	1.3	1.8	4.0	1.8	4.0
100	1.0	4.0	1.0	4.0	3.3	8.0	3.3	8.0
150	1.5	7.0	1.5	7.0	4.3	11.0	4.3	11.0
250	3.0	7.0	4.0	12.0	7.0	15.0	7.0	16.5
500	6.0	7.0	8.0	12.0	11.0	20.0	11.0	23.0
750	7.0	7.0	12.0	12.0	16.0	20.0	16.0	33.5
1000	7.0	7.0	12.0	12.0	20.0	20.0	20.0	33.5
1500	7.0	7.0	12.0	12.0	20.0	20.0	29.0	33.5

1. Set pressures are based upon valve discharge into an atmospheric pressure return line. If return line pressure is significantly higher than atmospheric pressure, then consult factory for capacity information.

SELECTION GUIDE

Example:	K10	A	W	A	01	–	E	1
Type								
K10 Type K10								
K05 Type K5								
K5C Type K5C								
K15 Type K15								
Valve size								
A ¼ in. (6 mm) (Types K10 and K15)								
B ⅜ in. (10 mm) (Types K10 and K15)								
C ½ in. (13 mm) (Types K10 and K15)								
D ¾ in. (19 mm) (Types K10 and K15)								
E 1 in. (25 mm) (Types K5, K5C and K10)								
F 1¼ in. (32 mm) (Types K5, K5C and K10)								
G 1½ in. (38 mm) (Types K5 and K5C)								
H 2 in. (50 mm) (Types K5 and K5C)								
Service								
W Water/oil (All)								
Body/connection style								
A Angle type (bottom in/side out)								
Variation								
01 Standard								
02 W/o nozzle and piston O-ring, Asperated piston (Type K10, size 1¼ in. (32 mm) only)								
Design revision								
(-) Original design								
Spring material								
E Stainless steel								
Spring range								
Refer to tables in pages 3, 4 and 6								

CASH VALVE™ TYPE KP BACK PRESSURE VALVES

A high capacity pilot operated back pressure valve that offers accurate control and dependable protection against overpressure conditions

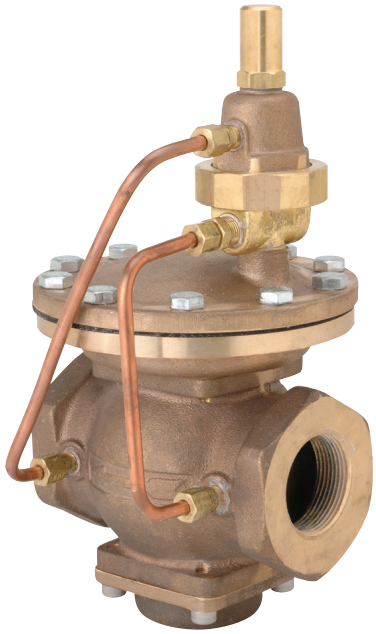

FEATURES

- Automatically maintains maximum pressure in a vessel or system by relieving overpressure into a lower pressure return line or to atmosphere.
- Soft rubber seat allows tight shut-off under no-flow conditions.
- Available with factory modifications for systems with temperatures to 400°F (204°C)* and pressure to 400 psig (27.6 barg).
- Pilot system can be removed as one unit for easy servicing.
- Choice of 15-65 psig (1-4.5 barg) and 50-200 psig (3.4-13.8 barg) adjustment ranges. Special hi-pressure range from 200-400 psig (13.8-27.6 barg) also available.
- Maximum overpressure on standard spring ranges up to 300 psig (20.7 barg); 500 psig (34.4 barg) on hi-pressure range.

* The high temperature version must not be used on water applications that will flash to steam on the downstream side of the valve.

GENERAL APPLICATION

Designed for various gases or water service in systems where accurate control must be maintained, especially when high capacity flows are required. Typically for pump or test system by-pass and pressure vessel control applications.

TECHNICAL DATA

Materials:	Brass
Sizes:	1", 1¼", 1½", 2" (25, 32, 38, 50 mm)
Connections:	Threaded NPTF
Pressure range:	15 to 200 psig (1 to 13.8 barg)
Temperature range:	-20 to 160°F (-29 to 71°C)

© 2017 Emerson. All Rights Reserved.

MODEL OVERVIEW

The KP water valve has an inlet pressure connection to the pilot valve as well as a connection from the pilot valve's upper spring chamber to the valve outlet or downstream line. A fixed bleed orifice in the pilot valve spring chamber allows water pressure from the upper spring chamber to bleed downstream. However, downstream pressure in excess of 5 psi (0.34 barg) could affect valve performance. In this case the pilot bleed line should be piped to an open drain.

The KP air model is similar to the water valve except that the pressure in the spring chamber bleeds directly to atmosphere rather than to the downstream line.

OPERATION

Initially, both the main valve plug (A) and the pilot valve seat disc (B) are in a closed position. Both will remain closed until the inlet pressure approaches the valve's pressure setting.

When pressure is introduced at the main valve inlet it is also directed through the copper tube (C) to the pilot valve diaphragm chamber (D). The pressure required to open the pilot valve seat disc is determined by the pressure setting of the pilot spring (E). When the inlet pressure in the diaphragm chamber (D) is greater than the pressure setting, the seat disc opens. Pressure then passes from the pilot valve diaphragm chamber through the seat ring and into the main valve diaphragm chamber (F). Pressure also passes through the seat disc orifice (K) into the pilot valve spring chamber (G), where it is vented downstream through the pilot valve orifice (H) and the copper tube (I), (or to atmosphere in air service where normally no tube is required). When pressure in the main valve diaphragm chamber exceeds the upward force of the main valve piston spring (J), the main valve plug opens and allows flow through the valve.

When the inlet pressure drops below the pressure setting of the valve, the pilot spring forces the seat disc to close. Pressure in the main valve diaphragm chamber now bleeds through the seat disc orifice into the spring chamber and then downstream on water valves or into the atmosphere on air models.

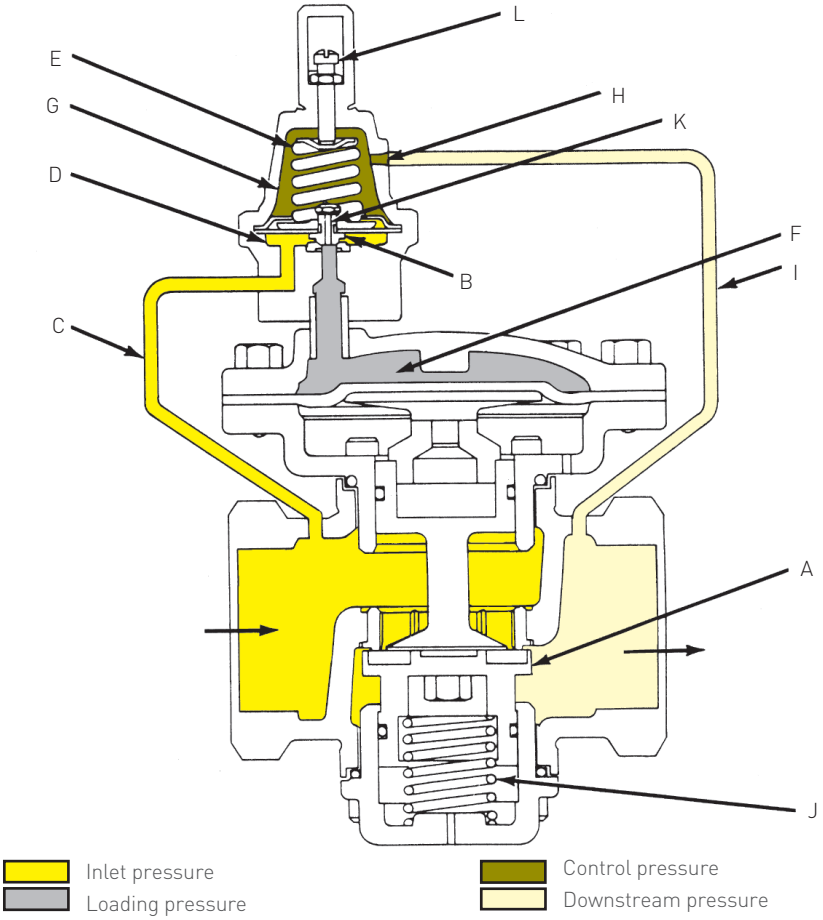

SCHEMATIC ILLUSTRATION TYPE KP

As pressure drops in the main valve diaphragm chamber, the main valve piston spring forces the main valve plug to close. As the seat is a rubber material, the valve is now tightly shut-off.

In normal operation, the pilot valve modulates the pressure in the diaphragm chamber to control the main valve plug opening. This regulates the fluid flow and maintains the pressure control on the system under varying pressure and flow conditions.

KP HIGH CAPACITY PILOT OPERATED BACK PRESSURE VALVE

Construction

The Type KP main valve is fitted with a brass body, diaphragm case and stem; NBR diaphragm and seat disc and a stainless steel spring. The pilot valve has a brass body and spring chamber; a stainless steel spring, seat disc and seat ring with bronze diaphragms for air service or a neoprene .diaphragm for water applications

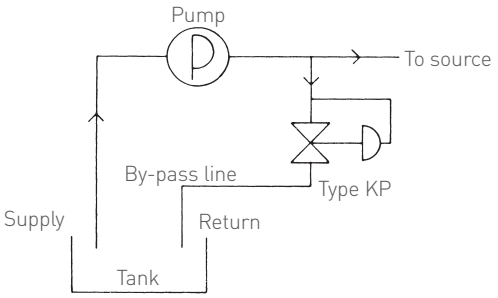

Pump by-pass - Type KP will serve as a highly accurate, high capacity .pump by-pass valve

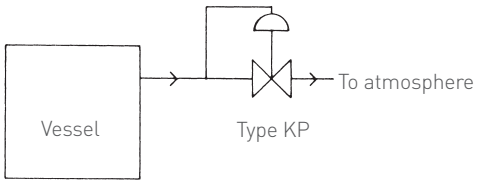

Back pressure relief - the KP can be used as an in-line back pressure .relief valve where both accuracy and high capacity are required

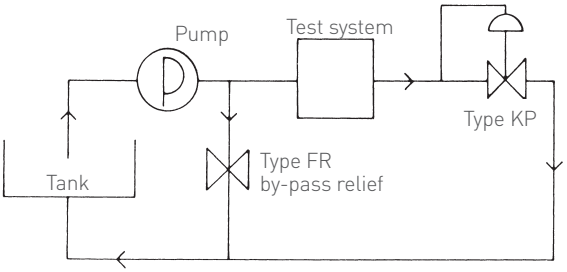

Test system by-pass - an FR Series or similar by-pass valve will function as a by-pass pressure control with the KP used as an in-line back pressure control to maintain the system's discharge pressure.

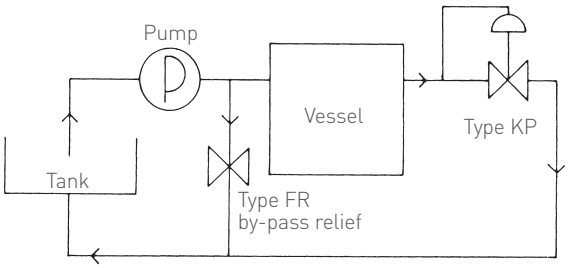

Pressure vessel control - in this example, a standard back pressure valve serves as a by-pass pressure valve and the KP controls the outlet pressure from a vessel or container.

TYPICAL INSTALLATIONS

SPECIFICATIONS

Size	Service	Dimensions A	Dimensions B	Dimensions C	Dimensions D	Shipping weight (lbs)
1"	*	6¾"	2⅞"	3⅛"	4½"	8¼
	**	7⅞"	2⅞"	3½"	4½"	8¾
1¼"	*	6¾"	2⅞"	3⅛"	4½"	8¼
	**	7⅞"	2⅞"	3½"	4½"	8¾
1½"	*	7¼"	2 15/16"	3 15/16"	5¾"	20¼
	**	8⅜"	2 15/16"	3 15/16"	5¾"	20¾
2"	*	7¼"	2 15/16"	3 15/16"	5¾"	20¼
	**	8⅜"	2 15/16"	3 15/16"	5¾"	20¾

* Air

** Water

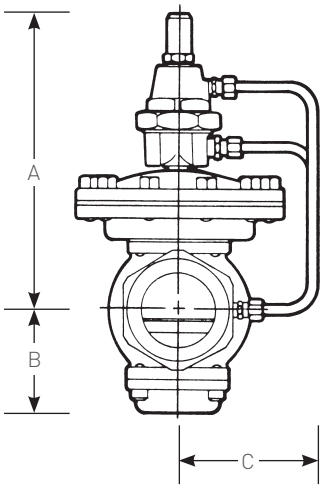

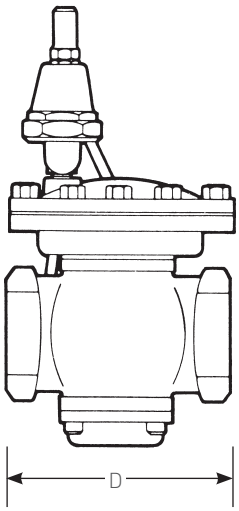

SPECIFICATIONS

		Capacity information							
		Water flow (gpm)				Air flow (scfm)			
Inlet pressure (psi)	**Inlet pressure rise***	**1"**	**1¼"**	**1½"**	**2"**	**1"**	**1¼"**	**1½"**	**2"**
15	5%	25	25	45	45	162	180	500	560
	10%	30	35	60	60	182	200	540	600
	20%	35	50	95	95	210	235	575	640
25	5%	35	35	60	60	225	250	735	820
	10%	40	50	80	80	265	295	800	890
	20%	40	70	125	125	295	330	890	990
50	5%	40	60	85	85	405	450	1260	1400
	10%	50	70	105	105	435	485	1300	1450
	20%	50	90	130	155	460	515	1365	1520
75	5%	50	70	100	100	540	600	1590	1770
	10%	50	90	125	125	550	610	1635	1820
	20%	50	90	130	180	575	640	1710	1900
100	5%	50	90	120	120	615	685	1820	2020
	10%	50	90	130	150	635	707	1890	2100
	20%	50	90	130	210	660	735	1980	2200
125	5%	50	90	130	135	688	765	2030	2260
	10%	50	90	130	180	710	790	2125	2360
	20%	50	90	130	210	745	830	2215	2460
150	5%	50	90	130	160	760	845	2250	2500
	10%	50	90	130	210	780	870	2320	2580
	20%	50	90	130	210	815	905	2410	2680
200	5%	50	90	130	200	855	950	2565	2850
	10%	50	90	130	210	875	975	2610	2900
	20%	50	90	130	210	920	1020	2700	3010

Note: flows are based on valve discharge to atmosphere or to an atmospheric pressure return line. If the valve discharge pressure is higher than 5 psi, consult the factory for capacity information.

* Inlet pressure rise is defined as the increase in inlet pressure required to pass a given flow, shown here as a percentage. For example: The size of KP valve required to pass 70 gpm at a set pressure of 50 psi and a maximum allowable overpressure to 55 psi (10% rise), based on the table above, would be a 1¼" KP valve.

SPECIFICATIONS

Typical performance curves

The performance curves shown are for a 2" (50 mm) Type KP for water service at pressure settings of 75, 100 and 150 psi (5.2, 6.9 and 10.34 barg). These flow curves clearly show the exceptional control offered by the Type KP; there is very little change in pressure from minimum to maximum flow. For example, a 2" (50 mm) KP with a 100 psi (6.9 barg) pressure setting will pass 120 gpm (454 l/min) with only a 5% rise in .((pressure (to 105 psi (7.2 barg

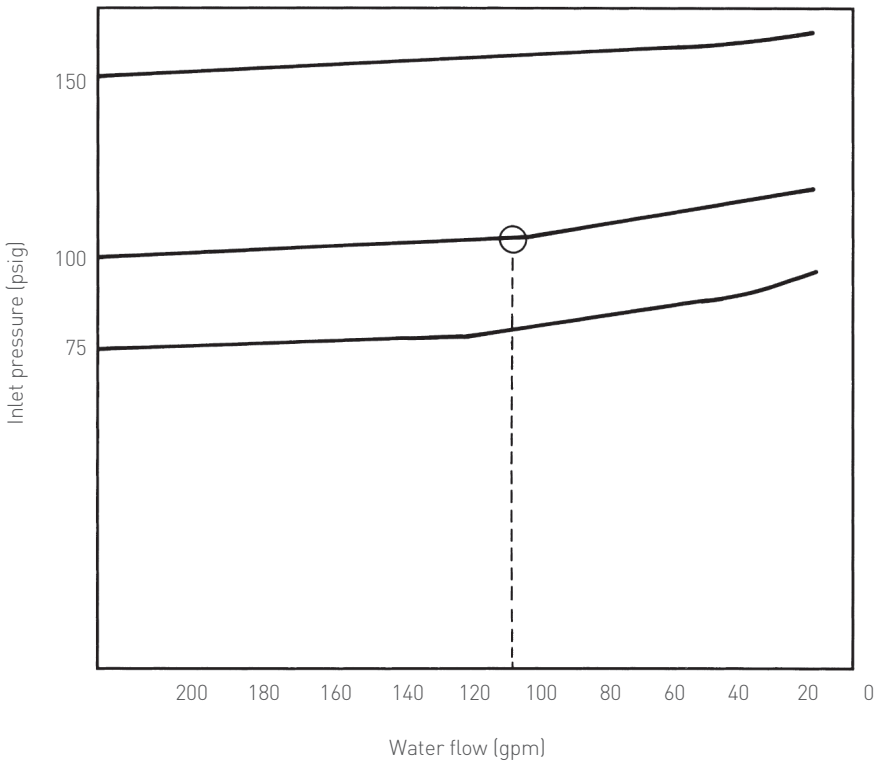

TYPICAL PERFORMANCE CURVE PRESSURE - 2" TYPE KP VALVE SHOWN

SELECTION GUIDE

Example:	K	P	E	W	S	B	F	0	1	-	E	1
Model												
KP KP (pilot operated BPV)												
Valve size												
E 1"												
F 1¼"												
G 1½"												
H 2"												
Service												
W Water												
A Air												
T High temperature water/air												
O Oxygen gas												
P High pressure water/air												
Body/connection style												
S Side inlet/side outlet – straight through w/ NPT connections												
Seat material												
B Buna-N (water/air)												
V Viton (O_2 gas service or water/air high temperature)												
S Silicone (water/air high pressure)												
Pressure screw style												
S Standard												
Variation												
01 Catalog standard												
02 Air/O_2 gas service vented downstream												
Design revision												
(-) Original design												
Spring material												
E Stainless steel												
Spring range												
Refer to table below												

STANDARD SPRING RANGES (psig)

Service	1	2	3	4	5
Water, Air	15 - 65	50 - 200	- - - -	- - - -	- - - -
High Temperature Water/Air	15 - 65	50 - 200	100 - 250	- - - -	- - - -
Oxygen Gas	15 - 65	50 - 200	40 - 100	- - - -	- - - -
High Pressure Water/Air*	0 - 30	31 - 50	51 - 80	81 - 150	151 - 260

*400°F Max Temperature

CASH VALVE™ LS SERIES PRESSURE REDUCING AND REGULATING VALVES

High pressure single-seated, spring loaded, direct acting diaphragm type regulators for inlet pressures to 2400 psig (165.5 barg)

FEATURES

- Automatically reduce high inlet pressures to lower outlet pressures within close limits regardless of fluctuations.
- Designed for use on air, water, oil, oxygen, carbon dioxide and other gases and fluids.
- Designed and built to meet the rugged requirements of high pressure regulation and reduction.
- Exceptional flow characteristics.
- Stainless steel piston/piston assemblies, cylinders, seat ring and strainer screens as standard.
- Nitrile (NBR), fluorocarbon (FKM) and bronze diaphragm and NBR, FKM and polytetrafluoroethylene (PTFE) O-rings.
- Self-renewable seat ring is simply flipped over and re-installed rather than replaced.
- NPTF 'Dryseal' threaded ends as standard.
- Closing cap or T-handle adjusting screw options available.

GENERAL APPLICATION

The LS Series Pressure Reducing and Regulating Valves are recommended for use on high pressure test rigs and pressure vessel or casting test equipment, hydraulic cylinders and air tanks.

TECHNICAL DATA[1]

Materials:	Bronze
Sizes:	½ and ¾ in. (15 and 20 mm)
Connections:	NPTF
Maximum inlet pressure:	2400 psig (165.5 barg)
Reduced pressure range:	40 to 750 psig (2.8 to 51.7 barg)
Temperature range:	-40 to 180°F (-40 to 82°C)

1. Refer to General Specifications Table in page 2 for more information.

© 2017 Emerson. All Rights Reserved.

MODELS OVERVIEW

All LS Series valves are designed and built to meet the rugged requirements of a high pressure regulating and reducing valve with a bronze body, spring chamber and bottom plug. Four versions are available:

Type LS1 has a metal seat piston and cylinder particularly designed for high or low temperature and high pressure drop applications.

Type LS2 has an NBR seat and balanced piston design for applications requiring higher capacities and/or tight shut-off. The balanced design assures close control regardless of inlet pressure fluctuations.

Type LS3 is furnished with a modified cylinder and no strainer screen for applications involving heavy or high viscosity fluids.

Special note: Although the metal to metal seat in the Types LS1 and LS3 is stainless steel, which assures maximum seat life and good closure, it will not shut-off drip tight. For installations requiring a definite pressure maximum on the downstream side, it is recommended that a Cash Valve Type FR back pressure valve is installed close to the outlet of the Types LS1 or LS3 regulators. For full information on the Type FR, see datasheet VCTDS-00516.

OPTIONS

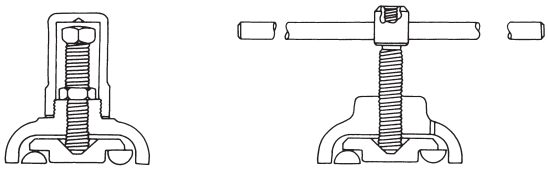

Closing cap T-Handle

LS SERIES INTERIOR DETAILS

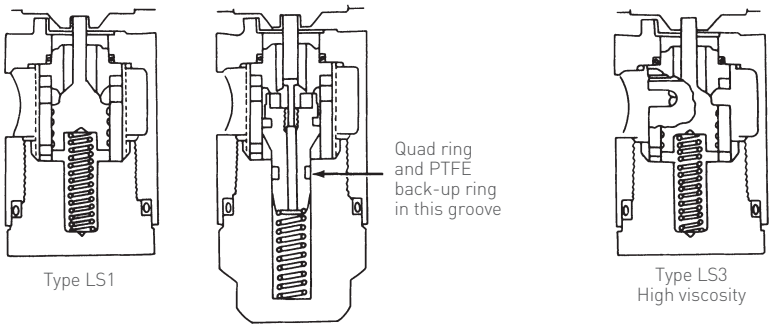

Type LS1 Type LS2 Balanced Type LS3 High viscosity

GENERAL SPECIFICATIONS

Type	Body Material	Spring Chamber Material	Body Size, in. (mm)	Materials			Maximum Inlet Pressure, psig (barg)	Maximum Outlet Pressure, psig (barg)	Temperature Range, °F (°C)
				Trim	Diaphragm	O-ring			
LS1	Bronze	Bronze	½, ¾ (15, 20)	Standard	NBR, FKM or Bronze	NBR, FKM or PTFE	2400 (165.5)	750 (51.7)	-40 to 180 (-40 to 82)
LS2	Bronze	Bronze	½, ¾ (15, 20)	Balanced	NBR, FKM or Bronze	NBR	2400 (165.5)	750 (51.7)	-40 to 180 (-40 to 82)
	Bronze	Bronze	½, ¾ (15, 20)	Non-balanced	NBR, FKM or Bronze	NBR, FKM or PTFE	2400 (165.5)	750 (51.7)	-40 to 180 (-40 to 82)
LS3	Bronze	Bronze	½, ¾ (15, 20)	Standard	NBR, FKM or Bronze	NBR, FKM or PTFE	2400 (165.5)	750 (51.7)	-40 to 180 (-40 to 82)

STANDARD SPRING RANGES, psig (barg)

Type	Size, in. (mm)	Spring Material	Spring ranges
LS1, LS2 and LS3	½ and ¾ (15 and 20)	Steel	40 to 200 (2.8 to 13.8)
			40 to 350 (2.8 to 24.1)
			40 to 500 (2.8 to 34.5)
			400 to 750 (6.9 to 51.7)

LS SERIES PARTS

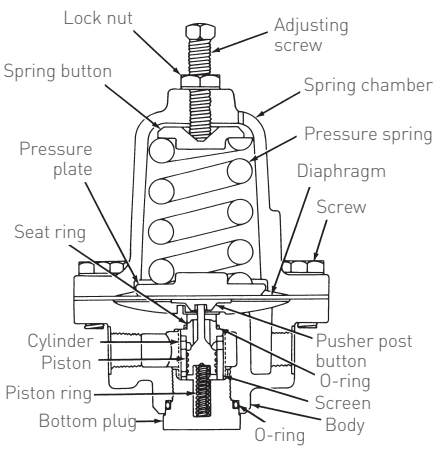

LS SERIES DIMENSIONS

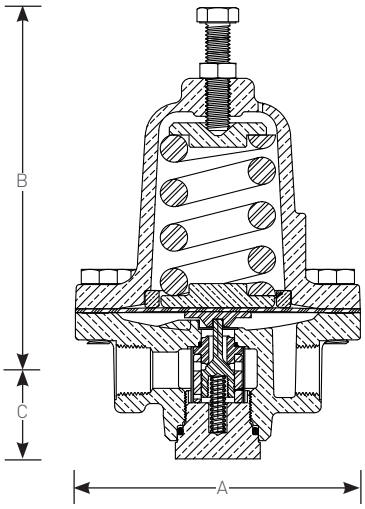

LS SERIES

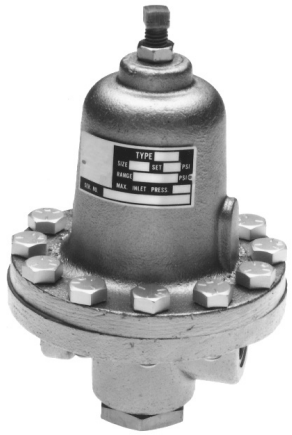

DIMENSIONS

Type	Size, in. (mm)	Dimensions, in. (mm) A	B	C	Shipping weight, lbs (kg)
LS1, LS2 and LS3	½ and ¾ (15 and 20)	5.88 (149.2)	7.63 (193.1)	2.00 (50.8)	20 (9.1)

CAPACITIES (ALL SIZES[1])

Inlet pressure, psig	Outlet pressure, psig	Water capacity GPM 5% Fall-off	10% Fall-off	15% Fall-off	Air capacity SCFM 5% Fall-off	10% Fall-off	15% Fall-off
500	400	5	10	15	63	126	189
	250	6	12	18	74	148	222
	150	6	12	18	74	148	222
	100	6	12	18	74	148	222
750	500	7	14	21	105	210	325
	300	8	16	24	109	218	227
	150	9	18	27	109	218	227
	100	9	18	27	109	218	227
1000	750	7	14	21	135	270	405
	500	9	18	27	138	276	414
	300	10	20	30	138	276	414
	100	10	20	30	138	276	414
1500	750	11	22	33	220	440	660
	500	12	24	36	220	440	660
	300	13	26	39	220	440	660
	150	14	28	42	220	440	660
2000	750	14	28	42	293	586	879
	500	15	30	45	293	586	879
	300	16	32	48	293	586	879
	200	17	34	51	293	586	879
2400	750	17	33	50	351	703	1054
	500	18	35	53	351	703	1054
	300	19	37	56	351	703	1054
	200	20	39	59	351	703	1054

1. The above data reflects regulator flow capacities, in some cases this capacity may represent flow velocities which exceed recommended piping practices.

2. To obtain capacities for regulators using metal diaphragms, multiply the table values by 0.7

SELECTION GUIDE

Example:	LS1	B	S	B	S	01	–	D	1
Model									
LS1 Type LS1 (metal to metal seat)									
LS2 Type LS2 (PTFE soft seat)									
LS3 Type LS3 (metal to metal for heavy fluids)									
Valve size									
C ½ in. (15 mm)									
D ¾ in. (20 mm)									
Spring chamber style									
S Standard									
C With adjusting screw cap									
Diaphragm material									
B NBR									
Z Bronze									
V FKM									
Adjusting screw style									
S Standard									
T T-handle									
Variation									
01 Standard (NBR O-rings)									
02 FKM O-rings (Types LS1 and LS3 only)									
03 PTFE O-rings (Types LS1 and LS3 only)									
11 Type LS2 with non-balanced piston and NBR O-rings									
12 Type LS2 with non-balanced piston and FKM O-rings									
13 Type LS2 with non-balanced piston and PTFE O-rings									
Design revision									
(-) Indicates original design									
Spring material									
D Carbon steel									
Spring range									
Refer to table in page 2									

CASH VALVE™ TYPES D-51/D-52 VACUUM VALVES

Vacuum regulators and breakers to maintain system vacuum levels accurately

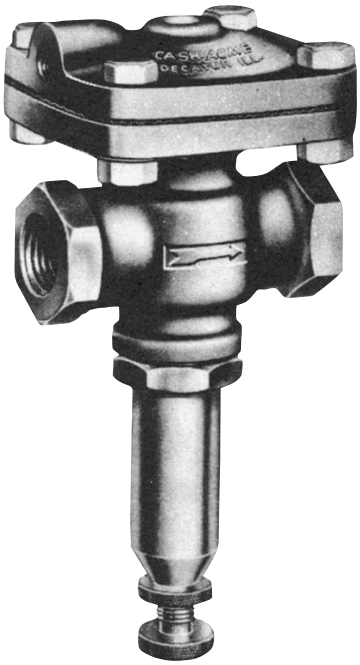

FEATURES

- Fully adjustable
- Choice of vacuum ranges
- Large ports
- Tight seating
- All parts easily replaceable on-line
- Long, light spring provides maximum sensitivity

GENERAL APPLICATION

Designed for regulation, where a predetermined vacuum is to be maintained accurately in a closed system or for vacuum breaking, by admitting atmosphere or other gases or liquids automatically when the vacuum level exceeds the valve setting.

TECHNICAL DATA[1]

Sizes:	½ to 2 in. (15 to 50 mm)
Connections:	NPTF
Adjustable vacuum range:	0 to 30 in. Hg (0 to 762 mm Hg)

1. Refer to General Specifications Table in page 2 for more information.

© 2017 Emerson. All Rights Reserved.

TYPES D-51 AND D-52

Types D-51 vacuum regulator and D-52 vacuum breaker for use on any non-corrosive gases or liquids.

CONSTRUCTION

All bronze body, Nitrile (NBR) diaphragms, chrome plated bronze body seats, composition seat discs; large ports, high capacity, knurled-head adjusting screw with lock nut, screwed ends, tight seating, connection above diaphragm (normally exposed to atmosphere) is ⅛ NPTF (4 mm) on ½ and ¾ in. (15 and 20 mm) body sizes and ¼ NPTF (8 mm) on 1 to 2 in. (25 to 50 mm) body sizes. Available over a wide adjustment range and install in any position.

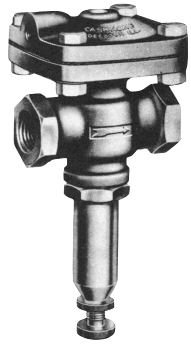

Type D-52
½ or ¾ in. (15 or 20 mm) size

PRINCIPLES OF OPERATION

Type D-51

The valve inlet is connected to the system in which the lower vacuum is to be held; the valve outlet is connected to a source - for example, a vacuum pump. Spring is adjusted for correct vacuum on inlet side, assume 5 in. Hg (127 mm Hg). Outlet side is subjected to pump vacuum of 25 in. Hg (635 mm Hg) constant or variable. Any change in controlled vacuum (5 in. (127 mm)) produces valve movement to correct for that change, maintaining the inlet vacuum within very narrow limits. There's no step- or snap-action as it's full floating and automatic. Turning the adjusting screw clockwise increases vacuum setting; counter-clockwise gives reduced vacuum setting.

Type D-52

The valve inlet is exposed to atmosphere (or to other gases or liquids being admitted); the valve outlet is connected to equipment in which vacuum is to be maintained automatically. Spring force holds the valve closed at the desired vacuum setting. Increase in vacuum on the outlet side (also effective in chamber below diaphragm) pulls the diaphragm downward to increase valve opening, admitting atmosphere (or other gases or liquids) into the vacuum system and 'breaking' the vacuum back to the valve setting. Full floating, automatic action. Turning the adjusting screw clockwise produces a higher vacuum setting; counter-clockwise lowers the vacuum setting.

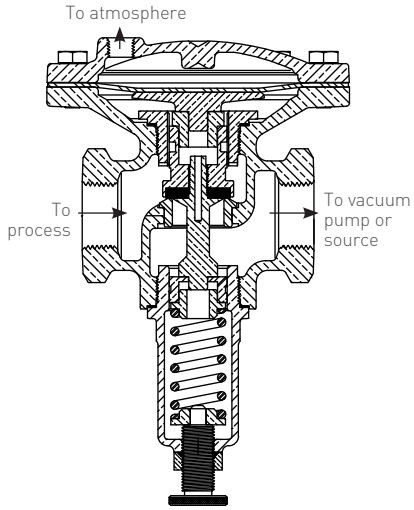

Sectional view Type D-51
1 or 1 ¼ in. (25 or 32 mm) size

GENERAL SPECIFICATIONS

Product	Body Material	Service	Body Size, in. (mm)	Materials: Diaphragm	Materials: Seat (Disc)	Maximum Inlet Pressure, psi (bar)	Maximum Outlet Pressure, psi (bar)	Temperature Range, °F (°C)
D-51 D-52	Bronze	Air	½ to 2 (15 to 50)	NBR	NBR	250 (17.2)	15 (1.0)	32 to 180 (0 to 82)
					Silicone	250 (17.2)	15 (1.0)	32 to 180 (0 to 82)

STANDARD SPRING RANGES, in. Hg (mm Hg)

Type	Size, in. (mm)	1	2
D-51, D-52	½, ¾ (15, 20)	2 to 30 (51 to 762)	- - - -
	1, 1 ¼ (25, 32)	0 to 5 (0 to 127)	2 to 30 (51 to 762)
	1 ½, 2 (40, 50)	0 to 10 (0 to 254)	8 to 30 (203 to 762)

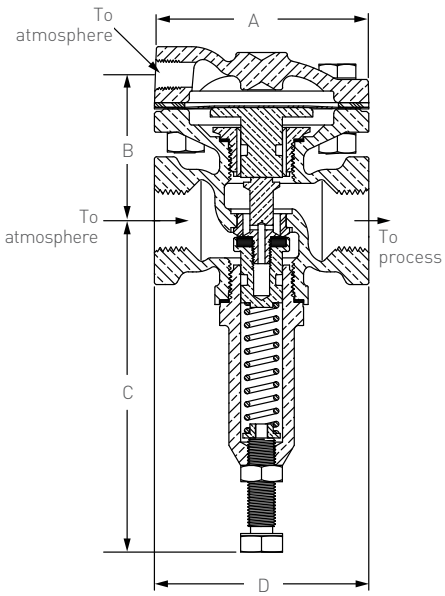

Sectional view Type D-52
½ or ¾ in. (15 or 20 mm) size

DIMENSIONS

Type	Size, in. (mm)	Dimensions, in. (mm): A	B	C	D	Shipping weight, lbs (kg)
D-51 / D-52	½, ¾ (15, 20)	2.88 (73.2)	1.96 (49.8)	4.42 (112)	2.88 (73.2)	3 ½ (1.59)
D-51 / D-52	1, 1 ¼ (25, 32)	5.88 (149)	3.45 (87.6)	5.62 (143)	4.50 (114)	13 (5.90)
D-51 / D-52	1 ½, 2 (40, 50)	5.88 (149)	3.94 (100)	8.94 (227)	5.75 (146)	21 (9.53)

SELECTION GUIDE

Example:	D51	C	W	S	O	S	B	01	-	E	1

Model

D51 Type D-51 Bronze vacuum regulator
D52 Type D-52 Bronze vacuum breaker

Valve size

C	½ in. (15 mm)	**F**	1 ¼ in. (32 mm)
D	¾ in. (20 mm)	**G**	1 ½ in. (40 mm)
E	1 in. (25 mm)	**H**	2 in. (50 mm)

Service

W Water
A Air

Connection style

S Side inlet/Side outlet - Straight thru with NPT connections

Seat material

B NBR
S Silicone

Chamber style

S Standard
V Vented (Type D-52 1 and 1 ¼ in. (25 and 32 mm) only)

Diaphragm material

B NBR

Variation

01 Diaphragm chamber connection over inlet
02 Diaphragm chamber connection over outlet

Design revision

(-) Original design

Spring material

E Stainless steel

Spring range

Refer to the table on page 2

NOTE

NPTF, also referred to as 'Dryseal' thread, is designed to provide a more leak-free seal without the use of Polytetrafluoroethylene (PTFE) tape or other sealant compound. NPTF threads are interchangeable with NPT threads and are standard on all Cash Valve products.

CASH VALVE™ TYPE D53 CONTROL VALVES

A pressure operated diaphragm type control valve designed to control the flow of a fluid or air by an independent pressure applied to the valve diaphragm.

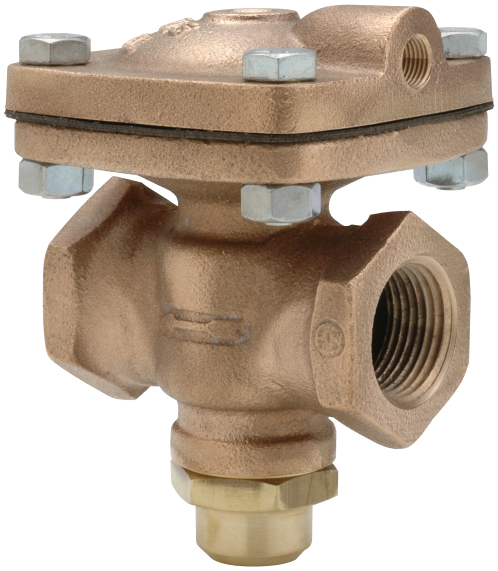

FEATURES

- Available either normally open; closed by diaphragm pressure or normally closed; opened by diaphragm pressure.
- Diaphragm pressure connection can be indexed to over inlet, over outlet or over either side for maximum hook-up flexibility.
- Full port diameter means full capacity and low pressure drop through the valve.
- Larger sizes have a fully balanced inner valve for both inlet and outlet pressures up to 250 psig (17.2 barg), ensuring operating pressure requirements unchanged by variations in system pressure.
- Larger size valve component interchangeability enables easy changeover from normally open to normally closed or vice versa.

GENERAL APPLICATION

Suitable for service with water, air, oil or any non-corrosive fluid as a control valve for water cooled air compressors, an air compressor dump valve, an explosive atmosphere valve or as a substitute for expensive electric solenoids.

TECHNICAL DATA[1]

Materials:	Bronze
Sizes:	½, ¾, 1, 1¼, 1½ and 2 in. (15, 20, 25, 32, 40 and 50 mm)
Connections:	NPTF
Pressure range[2]:	0 to 250 psig (0 to 17.2 barg)
Temperature range:	32 to 180°F (0 to 82°C)

1. Refer to General Specifications Table in page 2 for more information.
2. The maximum diaphragm loading pressure must not exceed 300 psig (20.7 barg).

© 2017 Emerson. All Rights Reserved.

CONSTRUCTION/SPECIFICATIONS

The Type D53 Control Valve is fitted with a bronze body, renewable stainless steel plated valve seat of full port diameter, a renewable Nitrile (NBR) composition seat disc and diaphragm or fluorocarbon (FKM) option for body sizes ½ and ¾ (15 and 20 mm) only, and rust resistant steel bolts.

GENERAL SPECIFICATIONS

Body Material	Seat Position	Body Size, in. (mm)	Materials				Maximum Inlet Pressure, psig (barg)	Maximum Outlet Pressure, psig (barg)	Temperature Range, °F (°C)
			Spring	Trim	Seat (Disc)	Diaphragm			
Bronze	Normally open	½ to 2 (15 to 50)	SST (Standard, Heavy, None)	Brass	NBR or FKM[1]	NBR or FKM[1]	250 (17.2)	250 (17.2)	32 to 180 (0 to 32)
	Normally open (Min Flow Stop)	1 to 1¼ (15, 20)	SST (Standard, Heavy, None)	Brass	NBR or FKM	NBR	250 (17.2)	250 (17.2)	32 to 180 (0 to 32)
	Normally closed	½ to 2 (15 to 50)	SST (Standard, Heavy, None)	Brass	NBR or FKM[1]	NBR or FKM[1]	250 (17.2)	250 (17.2)	32 to 180 (0 to 32)
	Normally closed (Min Flow Stop)	1½ and 2 (40 and 50)	SST (Standard, Heavy, None)	SST	NBR	NBR	250 (17.2)	250 (17.2)	32 to 180 (0 to 32)

1. For sizes ½ and ¾ in. (15 and 20 mm) only.

STANDARD SPRING RANGES, psig (barg)

Spring material	Spring ranges
Stainless steel	0 to 250 (0 to 17.2)
Stainless steel (Heavy spring)	0 to 250 (0 to 17.2)
No spring	- - - -

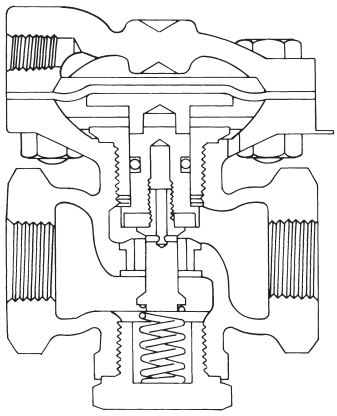

¾ in. (10 mm)
Type D53 Normally open

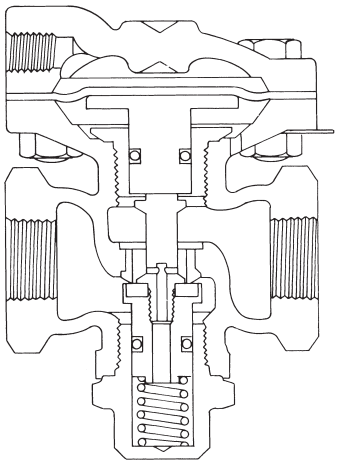

¾ in. (10 mm)
Type D53 Normally closed

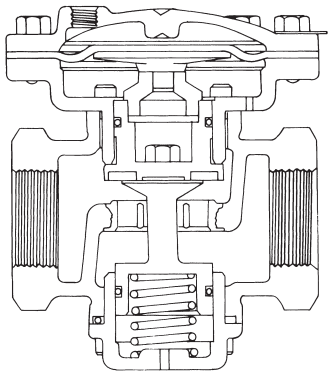

1½ and 2 in. (40 and 50 mm)
Type D53 Normally open

DIAPHRAGM PRESSURE REQUIREMENTS[1] (to fully open or fully close valve)

Inlet pressure, psig (barg)	Normally closed valve (pressure to fully open, psig (barg))	Normally open valve (pressure to fully close, psig (barg))
0	20 (1.4)	20 (1.4)
50 (3.4)	20 (1.4)	25 (1.7)
100 (6.9)	20 (1.4)	30 (2.1)
150 (10.3)	20 (1.4)	35 (2.4)
200 (13.8)	20 (1.4)	40 (2.8)
250 (17.2)	20 (1.4)	45 (3.1)

1. Open for ½ thru 1¼ in. (15 thru 32 mm) sizes.

NOTE

Diaphragm pressure requirements for 1½ and 2 in. (40 and 50 mm) sizes are 20 psig (1.4 barg) to fully open a normally closed valve and 20 psig (1.4 barg) to fully close a normally open valve.

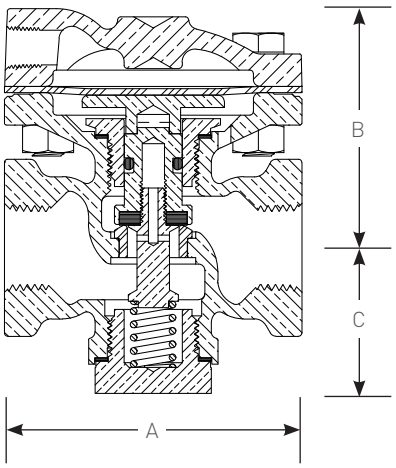

½ and ¾ (10 and 15 mm)

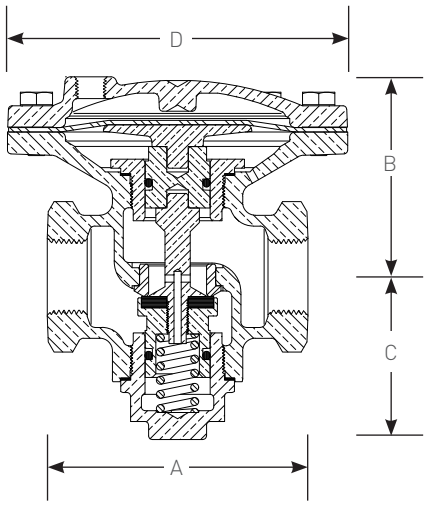

1 to 2 in. (25 to 50 mm)

DIMENSIONS

Size, in. (mm)	Top connection[1], in. (mm)	Dimensions, in. (mm) A	B	C	D	Shipping weight, lbs (kg)
½ (15)	⅛ (6)	2.88 (73.2)	2.31 (58.7)	1.41 (35.8)	- - - -	3 (1.36)
¾ (20)	⅛ (6)	2.88 (73.2)	2.31 (58.7)	1.41 (35.8)	- - - -	3 (1.36)
1 (25)	¼ (8)	4.50 (114)	3.45 (87.6)	2.81 (71.4)	5.88 (149)	7 (3.18)
1¼ (32)	¼ (8)	4.50 (114)	3.45 (87.6)	2.81 (71.4)	5.88 (149)	7 (3.18)
1½ (40)	¼ (8)	5.75 (146)	3.95 (100)	2.94 (74.7)	5.88 (149)	19 (8.62)
2 (50)	¼ (8)	5.75 (146)	3.95 (100)	2.94 (74.7)	5.88 (149)	19 (8.62)

1. Top connection extends vertically upward on 1 to 2 in. (25 to 50 mm) body sizes.

HOW TO FIND WATER CAPACITY

1. Determine the pressure drop (psig) across the valve (inlet pressure minus outlet pressure). On the graph, locate this valve on the pressure drop ordinate.
2. Locate the given gpm capacity on the water flow ordinate.
3. Draw a horizontal line from the pressure drop point and a vertical line from the flow capacity point and mark their intersection. Select the diagonal valve sizing line to the right of this intersection point. Either of the two sizes is the correct valve for the given service conditions. Do not select a valve size to the left of an intersection point.

Example: Given inlet pressure 20 psig (1.4 barg), outlet pressure 10 psig (0.7 barg), flow 20 gpm.

(1) Pressure drop = 10 psig (0.7 barg). Locate this point on the pressure drop ordinate.
(2) Locate the 20 gpm point on the water flow ordinate.
(3) The 10 psig (0.7 barg) horizontal pressure drop line and the vertical 20 gpm water flow line intersect between the ½ to ¾ in. (15 to 20 mm) and 1 to 1¼ in. (25 to 32 mm) sizing lines.

The closest valve size to the right of the intersection point is the 1 or 1¼ in. (25 or 32 mm) size. Select either of these two sizes.

(4) Maximum valve capacity = 38 gpm.

NOTES

1. Consult the factory for valve sizing with pressure drops greater than 100 psig (6.9 barg).
2. Maximum capacity of a selected valve size is found by drawing a horizontal line from the already determined intersection point to the valve sizing line. From this new point, draw a vertical line down to water flow ordinate. The maximum capacity of the valve is where this vertical line intersects the water flow ordinate.

WATER CAPACITY CHART

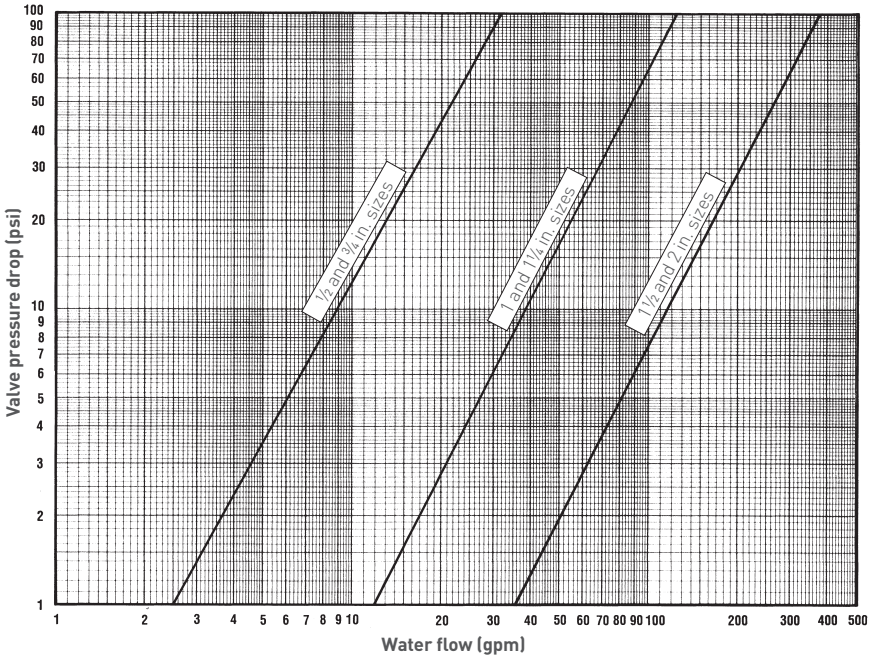

C_V=	½ and ¾ in.	1 and 1¼ in.	1½ and 2 in.
	2.5	12.0	35.0

HOW TO FIND AIR CAPACITY

1. Determine the pressure drop (psig) across the valve (inlet pressure minus outlet pressure). On the graph, locate this valve on the pressure drop ordinate.
2. Locate the given scfm capacity point on the air flow ordinate.
3. Draw a horizontal line from the pressure drop point and a vertical line from the flow capacity point and mark their intersection. Select the group of curves to the right of the intersection point. The inlet pressure curve must always be to the right of the intersection point. If not, the valve size must be obtained from the next group of inlet pressure curves – to the right of the intersection point.

Example: Given inlet pressure 20 psig (1.4 barg), outlet pressure 10 psig (0.7 barg), flow 200 scfm.

(1) Pressure drop is 10 psig (0.7 barg). Locate this point on the pressure drop ordinate.
(2) Locate the flow of 200 scfm on the air flow ordinate.
(3) Mark the point where the 10 psig (0.7 barg) and 200 scfm lines intersect. Notice the intersection point is to the right of the inlet pressure curve of 20 psig (1.4 barg). Therefore, a 1 or 1¼ in. (25 or 32 mm) valve should not be selected. Rather, a 1½ or 2 in. (40 or 50 mm) valve should be chosen from the next group of inlet pressure curves - to the right of the intersection point.
(4) Maximum valve capacity = 540 scfm.

NOTES

1. Consult the factory for valve sizing with pressure drops greater than 100 psig (6.9 barg).
2. Inlet pressure curves for pressures other than 10, 25, 50 or 100 psig (0.7, 1.7, 3.4 or 6.9 barg) should be spaced proportionately and drawn parallel to the given higher and lower inlet pressure curves.
3. Maximum valve capacity is found by drawing a horizontal line from the intersection point to the valve size inlet pressure curve. From this new point draw a vertical line down to the air flow ordinate. The maximum capacity of the valve is where this vertical line intersects the air flow ordinate.

AIR CAPACITY CHART

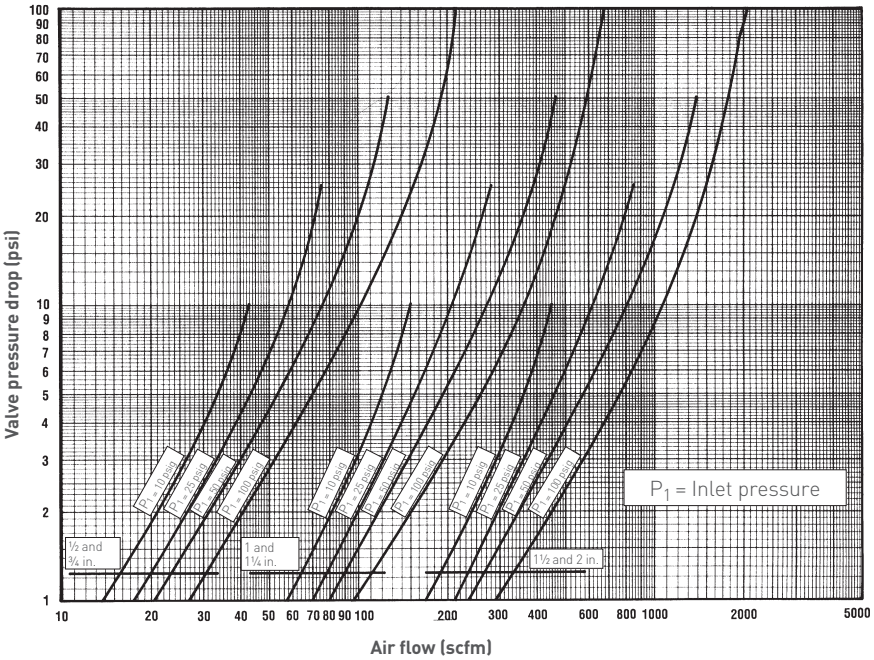

SELECTION GUIDE

Example:	D53	C	W	S	O	B	B	01	–	E	1

Model

D53 Type D53 bronze control valve

Valve size

C	½ in. (15 mm)	**F**	1¼ in. (32 mm)
D	¾ in. (20 mm)	**G**	1½ in. (40 mm)
E	1 in. (25 mm)	**H**	2 in. (50 mm)

Service

W Water/air

O Oxygen gas

Connection style

S Side inlet/side outlet - straight thru with NPT connections

Seat position

O Normally open

C Normally closed

Diaphragm material

B NBR

V FKM (for sizes ½ and ¾ in. only)

Seat material

B NBR

V FKM (for sizes ½ and ¾ in. only)

Variation

01 Diaphragm chamber connection in line with inlet

02 Diaphragm chamber connection right of inlet

03 Diaphragm chamber connection left of inlet

04 Minimum flow stop

Design revision

(-) Original design

Spring material

E Stainless steel

H Heavy spring (stainless steel)

N No spring

Spring range

Refer to table in page 2

CASH VALVE™ TYPE G-4 PRESSURE REGULATORS

A self-actuating pilot operated pressure reducing valve handling air, gas and steam and accurate to within ½% up to 3" and 1% for sizes to 6"

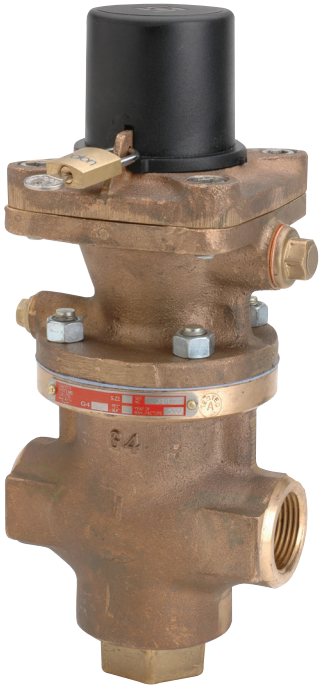

FEATURES

- Extremely compact design enables use of a smaller regulator.
- Constant outlet pressure up to the valve's maximum rated capacity regardless of changes in flow rate or inlet pressure.
- Very high flow rates due to the main valve assembly's full lift capability valve body design.
- Positive shut-off ensured by accurate guiding of the pilot and main valve assemblies. Non-metallic trims available for dead tight shut-off on air and gas applications.
- Pilot valve component parts interchangeability simplifies maintenance and allows greater spare parts flexibility.
- Available in bronze, cast iron and steel construction to allow for pressures up to 600 psi and temperatures up to 800°F.
- Specially prepared parts kits enable simple routine servicing or complete overhauls.

GENERAL APPLICATION

Suitable for use on steam heating lines, dryers, ovens, oil heaters, molding machines, steam jacketed equipment, sterilizers, large capacity kilns, retorts, heat exchangers, paper and board machines, cookers and any other steam, air and gaseous application.

TECHNICAL DATA

Materials:	Iron, bronze, cast and stainless steels
Sizes:	½" to 2" threaded ½" to 6" flanged
Maximum inlet pressure:	600 psig (41.3 barg)
Reduced pressure range:	1 to 300 psig (.07 to 20.7 barg)
Temperature range:	-20 to 800°F (-29 to 427°C)

© 2017 Emerson. All Rights Reserved.

CASH VALVE™ TYPE G-4 PRESSURE REGULATORS

Description

Fig. 2042 - Bronze

Fig. 2043 - Bronze

Fig. 2044 - Cast iron

Fig. 2046 - Cast steel

Size range ins	½	¾	1	1¼	1½	2	½	¾	1	1¼	1½	2	2½	3	4	5	6	½	¾	1	1¼	1½	2	2½	3	4	5	6
Maximum inlet press/temp ratings	Pressure/temperature ratings are strictly in accordance with the table below																											
Reduced pressure range psig	5*-300						5*-300						5*-235 air and gases 5*-175 steam			5-175		5-300									5-175	
Flanges ANSI	NPTF						CL150 and CL300 per ANSI B16.24						CL125 per ANSI B16.1					CL150 and CL300 per ANSI B16.5										

***Note:** 1 to 5 psig reduced pressure available with low pressure top maximum inlet pressure 100 psig

- (½") and (¾") sizes restricted internals in 1" body.
- (1 ¼") and (1½") sizes restricted internals in 2" body.

PRESSURE TEMPERATURE RATINGS

Material		End connection	Pressure (psig)						
Description	ASTM spec.	ANSI Class	0 to 150F	250F	300F	400F	450F	500F	750F
Cast Iron	A126 Class B	CL125 (iron)	200	175	160	135	125	-	-
Bronze	B62 Alloy 836	CL150 (bronze)	225	195	180	150	-	-	-
		CL300 (bronze)	500	425	390	300	-	-	-
		CL250 (bronze threaded)	400	365	300	250	-	-	-
Carbon steel	A216 GR WCB	CL150 (steel)	285	245	230	195	185	170	*
	A351 CF8 (304)	CL300 (steel)	740	660	655	630	615	590	500
		CL250 (steel threaded)	600	530	525	500	490	470	460

* 570°F for 150 psig

MINIMUM PRESSURE DIFFERENTIAL

The pressure differential is the difference between the inlet pressure and outlet (reduced) pressure. The minimum allowable pressure differential varies depending upon both the inlet pressure and the size of the valves.

Valve size	Inlet press. range (psig)	Minimum press. differential (psig)
½"-2"	10-50	5
	50-120	10
	120 PLUS	15
2½"-4"	10-50	10
	50 PLUS	15
5"-6"	Refer to sales office	Refer to sales office

Typical installation

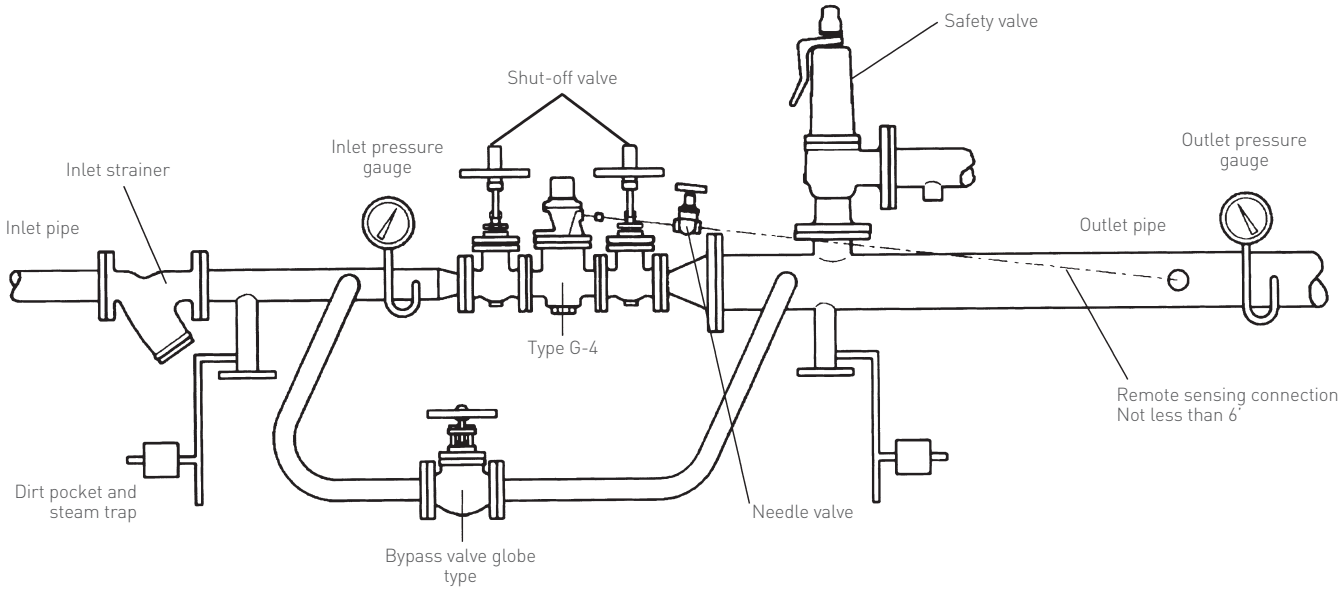

OPERATION

The G-4 regulator is primarily designed for use on steam although it works equally well with air and gases. It will maintain a constant pressure irrespective of variations in inlet pressure or steam demand from the system.

Steam at inlet pressure passes through the inlet relay port (G) to the pilot valve (D). Both pilot and main valves (H) initially are closed by the action of the pilot and main valve springs (E and I).

The pilot valve is opened by clockwise rotation of the adjusting screw (A) which compresses the adjusting spring (B) and applies load to the topside of the diaphragm (C), pushing open the pilot valve. Steam at inlet pressure now passes through the pilot valve and a relay port (K) to the piston (F), which pushes open the main valve.

The inlet steam pressure is reduced as it passes through the open main valve and seat to the valve outlet. At the same time steam at outlet pressure passes up the relay port (L) to the underside of the diaphragm.

The opening of the main valve determines the outlet pressure and this, in turn, is controlled by the pilot valve. The outlet pressure is a result of balancing the action of the adjusting spring on the top of the diaphragm against the reduced pressure acting on the underside, thus controlling the opening of the pilot valve.

The sensitivity of the diaphragm and adjusting spring ensure that any variation in reduced pressure will cause the pilot valve to open or close sufficiently to move the piston and main valve between the fully open and closed positions. In this way, the outlet pressure is maintained accurately under all operating conditions. Outlet pressure is increased by clockwise rotation of the adjusting screw or decreased by counter-clockwise rotation.

SECTION VIEW

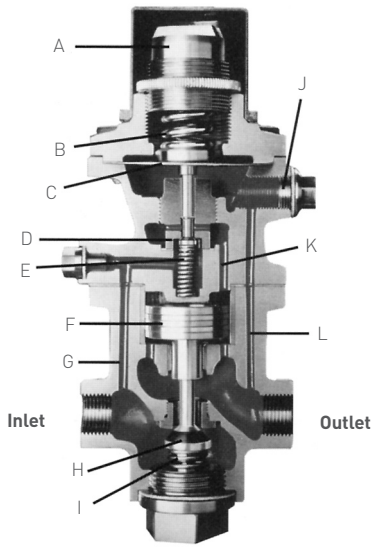

A. Adjusting screw
B. Adjusting spring
C. Diaphragm
D. Pilot valve
E. Pilot valve spring
F. Piston
G. Inlet relay port
H. Main valve
I. Main valve spring
J. Remote control port
K. Piston relay port
L. Reduced pressure relay port

Specifications

DIMENSIONS

	Fig. 2042						Fig. 2043					
Size	½	¾	1	1¼	1½	2	½	¾	1	1¼	1½	2
A	4⅛	4⅛	4½	4⅞	5¼	6⅜	5½	5⅝	6¾	7	7½	8½
B	8	8¼	8⅜	9⅝	9⅞	10¼	8	8¼	8⅜	9⅝	9⅞	10¼
C	2⅜	2½	2⅝	3	3⅛	3¼	2⅜	2½	2⅝	3	3⅛	3¼
Wt.lb.	13.2	15.0	15.4	23.8	28.0	33.9	17.6	18.9	19.8	30.0	35.9	45.8

	Fig. 2044						Fig. 2046					
Size	2½	3	4	5	6	1	2	2½	3	4	5	6
A	10	11¼	13½	16	16½	6¾	9	10	11¼	13½	16	16½
B	11¾	12	13⅜	16¾	17⅝	8¾	10½	11¼	11¼	12¾	15¾	16½
C	5¼	5¾	6⅞	9	9¾	2¾	3½	5⅛	5¾	7	8⅝	9¾
Wt.lb.	77.0	104.0	174.0	247.0	351.0	30.0	58.0	93.0	115.0	192.0	273.0	381.0

STANDARD ASSEMBLY

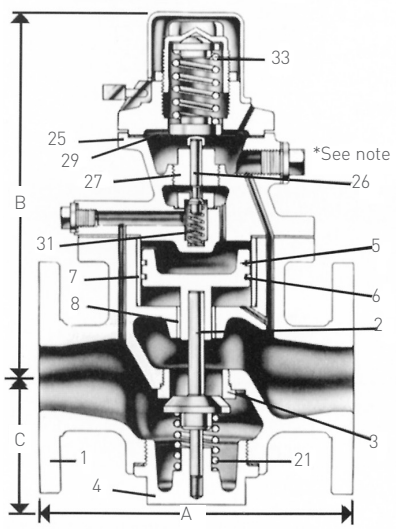

LOW PRESSURE TOP ASSEMBLY

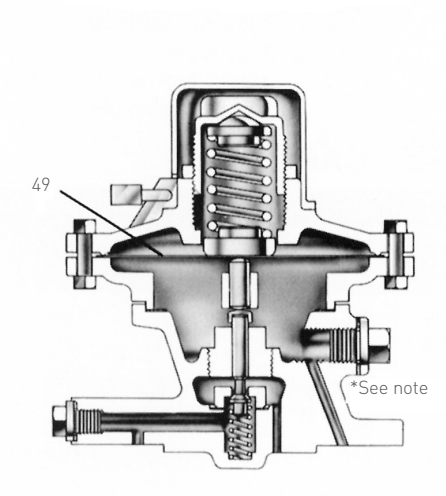

A special low pressure top assembly should be fitted for outlet pressures from 1 up to 5 psig (0.07 to 0.3 barg). Low pressure tops are available for valves up to 4" (100 mm) size. Larger valves are not suitable for outlet pressures of less than 5 psig (0.3 barg).

The low pressure top is supplied as a complete conversion unit for fitting to the existing pilot valve assembly. It incorporates a large diaphragm, providing a greater effective area and improved sensitivity to very low outlet pressure conditions.

REMOTE CONTROL

***NOTE**

We recommend a remote sensing connection be fitted whenever:

1. The outlet pressure is below 55% of the inlet pressure.
2. A low pressure top assembly is fitted.
3. Difficult outlet pipework conditions occur.

Please refer to factory for more details.

Specifications
SPRINGS

VALVE SIZE

	½" - 4"	5" and 6"*
1 - 5		5 - 20
5 - 50	(Yellow)	10 - 50
10 - 100	(Black)	40 - 100
40 - 150	(White)	50 -175
50 - 200	(Green)	
100 - 300	(Red)	

*Not color coded

NOTE

It is advisable to select a spring which will ensure that there is at least 10% extra adjustment available above the required reduced set pressure. The spring with the lowest pressure range should be used whenever possible.

MATERIALS OF CONSTRUCTION

Part no.	Part	Figure 2042 and 2043	Figure 2044	Figure 2046
1	Body	Bronze	Cast iron	Cast steel
2	Main valve*	Stainless steel	Stainless steel	Stainless steel
3	Main valve seat	Stainless steel	Stainless steel	Stainless steel
4	Bottom plug cover	Manganese bronze	Cast iron/aluminum bronze	Stainless steel
5	Piston	Brass	Bronze	Steel
6	Piston rings	Phosphor bronze	Phosphor bronze	Chrome iron
7	Liner	Stainless steel	Stainless steel	Stainless steel
8	Piston guide	Stainless steel	Stainless steel	Stainless steel (6" Monel®)
21	Main valve spring	Stainless steel	Stainless steel	Stainless steel
25	Pilot valve top	Bronze	Bronze	Steel
26	Pilot valve*	Stainless steel	Stainless steel	Stainless steel
27	Pilot valve plug	Stainless steel	Stainless steel	Stainless steel
29	Diaphragm	Stainless steel	Stainless steel	Stainless steel
31	Pilot valve spring	Stainless steel	Stainless steel	Stainless steel
33	Adjusting spring	Steel	Steel	Steel
49	Diaphragm for low pressure top	Phosphor bronze	Phosphor bronze	N/A

Gaskets: Steam-non-asbestos material. Air and gases-PTFE (2" and below) rubber bonded cork (2½" and above).
*Main and pilot valves are fitted with elastomeric inserts for use on air and gases when tight shut-off is required.

Note: for full parts list please refer to installation and maintenance instructions available on request.

TRIM SELECTION

	Duty	Trim
Standard valve	Steam	Stainless steel
Standard valve	Compressed air, carbon dioxide, nitrogen, hydrogen, helium	Nitrile
Oxygen Fig. 2043/3 only	Oxygen, methane	FKM

Specifications - capacities

		Steam - pounds per hour										
Inlet pressure	**Outlet pressure**	**½**	**¾**	**1**	**1¼**	**1½**	**2**	**2½**	**3**	**4**	**5**	**6**
Flow coefficient (C_V)		**2.1**	**4.3**	**7.1**	**10.7**	**15.6**	**26.8**	**42.9**	**53.4**	**95.6**	**138.7**	**197.5**
25	20	122	249	410	625	904	1555	-	-	-	-	-
	15	142	290	478	728	1053	1810	2903	3620	6940	9393	13379
	5	151	308	507	773	1118	1921	3082	3843	6889	9971	14202
50	45	160	327	540	823	1189	2044	-	-	-	-	-
	25	254	518	853	1300	1880	3231	5183	6463	11586	16769	23884
	5	254	518	853	1300	1880	3231	5183	6463	11586	16769	23884
75	65	240	490	807	1230	1778	3057	-	-	-	-	-
	60	274	560	923	1407	2034	3496	5401	6735	12073	17474	24887
	40	351	717	1182	1801	2603	4475	7178	8951	16045	23223	33076
	5	351	717	1182	1801	2603	4475	7178	8951	16045	23223	33076
100	90	275	562	926	1411	2039	3505	-	-	-	-	-
	85	318	650	1071	1632	2360	4056	5984	7463	13377	19362	27576
	55	453	924	1522	2319	3352	5762	9241	11524	20657	29899	42583
	5	453	924	1522	2319	3352	5762	9241	11524	20657	29899	42583
125	110	356	728	1199	1827	2641	4540	6486	8088	14499	20985	29888
	65	555	1133	1866	2844	4111	7067	11334	14134	25334	36668	52225
	10	555	1133	1866	2844	4111	7067	11334	14134	25334	36668	52225
	5	555	1133	1866	2844	4111	7067	11334	14134	25334	-	-
150	135	391	798	1315	2004	2897	4980	6850	8543	15313	22164	31568
	80	659	1344	2215	3375	4878	8385	13448	16771	30061	43509	61968
	10	659	1344	2215	3375	4878	8385	13448	16771	30061	43509	61968
	5	659	1344	2215	3375	4878	8385	13448	16771	30061	-	-
200	185	440	898	1479	2254	3258	5600	7096	8850	15863	-	-
	175	550	1122	1848	2816	4071	6998	10044	12525	22451	33150	47200
	110	852	1738	2863	4363	6306	10841	17386	21682	38864	56250	80114
	40	852	1738	2863	4363	6306	10841	17386	21682	38864	56250	80114
250	235	492	1003	1653	2519	3641	6260	7378	9200	16492	-	-
	175	941	1920	3162	4818	6964	11972	19200	23944	42918	62420	88913
	135	1054	2151	3544	5401	7806	13418	21519	26836	48103	69622	99159
	100	1054	2151	3544	5401	7806	13418	21519	26836	48103	69622	99159
	55	1054	2151	3544	5401	7806	13418	21519	26836	48103	69622	99159
300	285	542	1105	1821	2775	4011	6895	7619	9501	17030	-	-
	175	904	2527	4163	6344	9170	15762	25279	31525	56507	81935	116696
	165	1255	2560	4218	6427	9289	15968	25609	31936	57244	82854	118004
	100	1255	2560	4218	6427	9289	15968	25609	31936	57244	82854	118004
	75	1255	2560	4218	6427	9289	15968	25609	31936	57244	82854	118004

These capacities are based on a 3% variance from the regulator's set point.

Specifications - capacities

Type G-4 air (SCFM) capacity information												
Inlet pressure	**Outlet pressure**	**½**	**¾**	**1**	**1¼**	**1½**	**2**	**2½**	**3**	**4**	**5**	**6**
Flow coefficient (C_v)		**2.1**	**4.3**	**7.1**	**10.7**	**15.6**	**26.8**	**42.9**	**53.4**	**95.6**	**138.7**	**197.5**
25	20	38	79	130	199	288	495	-	-	-	-	-
	15	45	93	153	234	338	582	934	1165	2088	3022	4304
	5	48	99	163	249	360	620	994	1240	2224	3218	4584
50	45	49	100	165	251	363	625	-	-	-	-	-
	25	80	164	271	413	597	1026	1646	2053	3680	5326	7586
	5	80	164	271	413	597	1026	1646	2053	3680	5326	7586
75	65	73	150	247	377	544	936	-	-	-	-	-
	60	85	174	286	436	631	1085	1670	2083	3733	5404	7696
	40	111	227	374	570	823	1416	2271	2832	5077	7349	10466
	5	111	227	374	570	823	1416	2271	2832	5077	7349	10466
100	90	82	168	276	421	609	1047	-	-	-	-	-
	85	96	197	325	496	717	1283	1802	2247	4028	5831	8305
	55	142	289	477	727	1050	1806	2897	3612	6475	9372	13349
	5	142	289	477	727	1050	1806	2897	3612	6475	9372	13349
125	110	108	220	363	553	799	1374	1894	2412	4225	6260	8915
	65	175	357	589	897	1297	2229	3576	4459	7994	11570	16479
	10	175	357	589	897	1297	2229	3576	4459	7994	11570	16479
	5	175	357	589	897	1297	2229	3576	4459	7994	-	-
150	135	116	237	390	595	861	1480	1936	2442	4412	6441	9174
	80	206	421	693	1056	1527	2625	4210	5250	9411	13622	19401
	10	206	421	693	1056	1527	2625	4210	5250	9411	13622	19401
	5	206	421	693	1056	1527	2625	4210	5250	9411	-	-
200	185	128	262	432	659	952	1637	1987	2478	4443	-	-
	175	166	338	557	850	1228	2111	2987	3725	6677	9877	14082
	110	268	547	901	1374	1986	3414	5476	6829	12241	17717	25234
	40	268	547	901	1374	1986	3414	5476	6829	12241	17717	25234
250	235	190	286	472	720	1040	1788	2030	2546	4480	-	-
	175	292	596	928	1496	2163	3718	5963	7437	13330	19390	27620
	135	330	674	1111	1693	2447	4207	6747	8414	15082	21829	31091
	100	330	674	1111	1693	2447	4207	6747	8414	15082	21829	31091
	55	330	674	1111	1693	2447	4207	6747	8414	15082	21829	31091
300	285	152	310	511	757	1126	1901	2075	2600	4502	-	-
	175	387	790	1301	1983	2867	4928	7904	9857	17668	25623	36494
	165	392	801	1320	2011	2907	4998	8015	9996	17917	25993	36935
	100	392	801	1320	2011	2907	4998	8015	9996	17917	25993	36935
	75	392	801	1320	2011	2907	4998	8015	9996	17917	25993	36935

These capacities are based on a 3% variance from the regulator's set point.

Gas	**Oxygen**	**Nitrogen**	**Hydrogen**	**Helium**	**CO_2**	**Argon**	**Methane**
Factor	1.05	0.98	0.26	0.37	1.24	1.18	0.74

To find valve capacities for gases at ambient temperatures multiply required flow rate by Approximate factor. Use chart above for valve capacity.

Cash Valve
Cryogenic Products

Liquid-Gas Distribution System Schematic Diagram

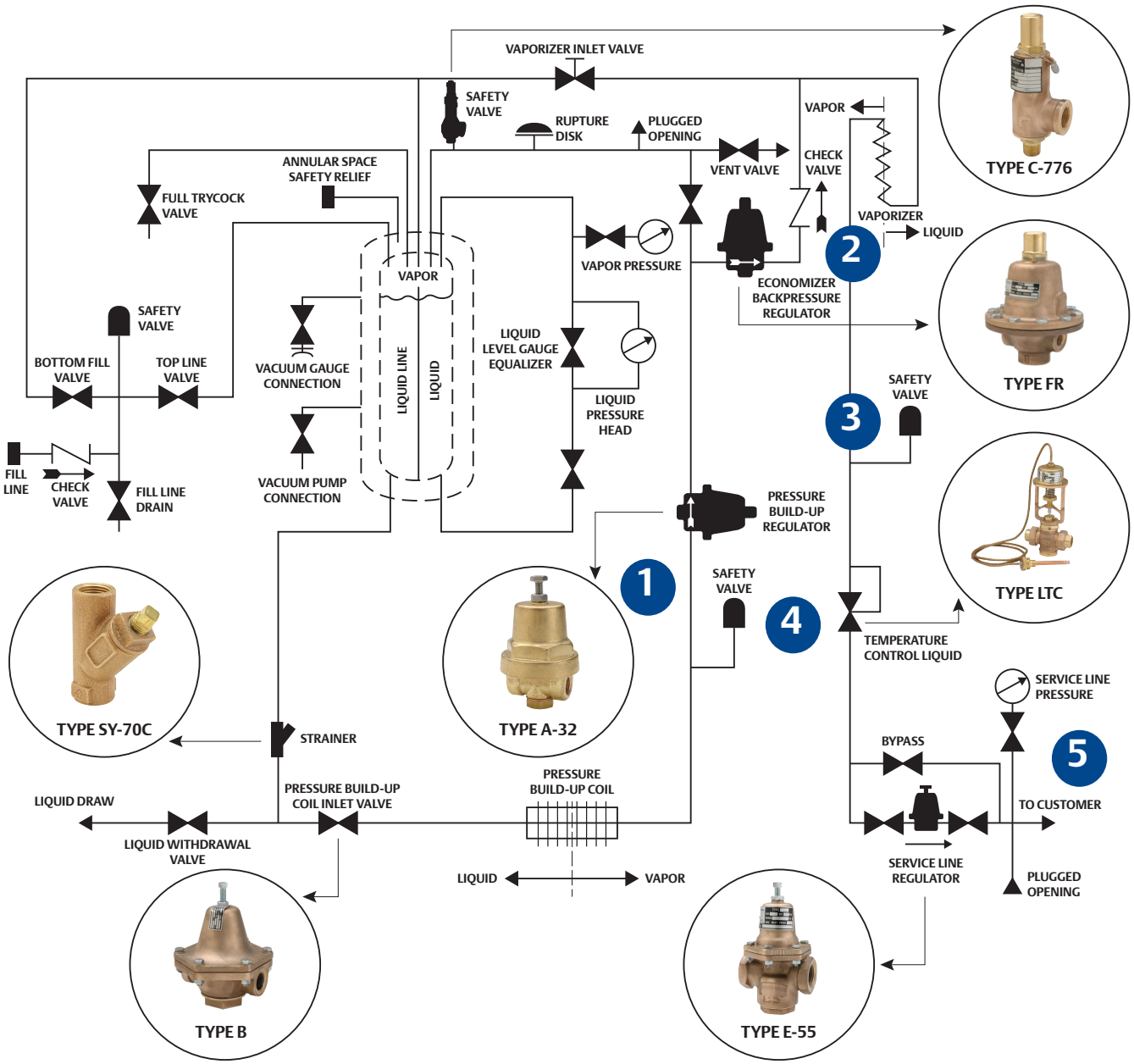

Cryogenic System Segments

1. Pressure Build Circuit

- Head pressure not sufficient to supply final line so pressure maintained about 25 psi (1.7 bar) above the service line
- When pressure reaches setpoint, the regulator shuts off, stopping vaporization and pressure build-up. Regulator reopens when demand initiated at the final line
- Takes liquid from base of Dewar, passes through valve and heat exchanger and is vaporized after being warmed by ambient air
- Typically between 125 and 175 psig (8.6 and 12.1 barg)
- Regulator may be located before or after heat exchanger but makes big difference in valve size

2. Economizer Circuit

- Usually set 10 to 25 psig (0.7 to 1.7 barg) above the set pressure of build-up regulator
- When no gas being used, heat leakage into the tank causes gas pressure to rise
- Excess pressure bypassed into final vaporizer circuit to prevent losing gas to atmosphere through safety valve

3. Combination Valves

- Combines pressure building and economizer functions
- Economizer function can start just before or when the pressure building pressure is reached

4. Low Pressure Cut-Off Circuit

- Temperature control valve designed to trip when gas temperature reaches a predetermined level (usually -20°F (-28.9°C))
- Most common cause is rapid gas draw
- Temperature control valve trips to prevent excessively cold gas from being delivered to service end of system when setpoint reached
- Valve automatically opens when gas temperature rises above setpoint

5. Final Line (House Line)

- Demand causes flow from system first
- Liquid flow passes through heat exchanger and is warmed by ambient air or steam
- Phase change occurs in the vaporizer to convert back to gas
- Pressure controlled using regulator
- Standard elastomers can be used for service line regulator since gas at or near ambient temperature

Relief Valves

Maximum Inlet Pressure	Outlet Pressure Range	Size	Maximum Capacity		Type Number
600 psig / 41.4 barg	15 to 600 psig / 1.0 to 41.4 barg	1/2 to 3/4 in. / 15 to 20 mm	4800 to 99,060 SCFH / 128.6 to 2654.8 Nm^3h		**C-776** Bronze
600 psig / 41.4 barg	15 to 500 psig / 1.0 to 34.5 barg	1 to 2 in. / 25 to 50 mm	9660 to 817,920 SCFH / 258.9 to 21,920 Nm^3h		**C-776** Bronze
600 psig / 41.4 barg	15 to 600 psig / 1.0 to 41.4 barg	1/4 to 1/2 in. / 8 to 15 mm	1560 to 32,040 SCFH / 41.8 to 859 Nm^3h		**C600** Bronze

Isolation Valves and Strainers

Maximum Inlet Pressure	Outlet Pressure Range	Size	Maximum Capacity		Type Number
700 psig / 48.3 barg	- - - -	1/4 to 1/2 in. / 8 to 15 mm	- - - -		**2300** Brass
400 psig / 27.6 barg	- - - -	1/2 to 2 in. / 15 to 50 mm	- - - -		**SY-70C** Bronze

Cryogenic

Pressure Build

Maximum Inlet Pressure	Outlet Pressure Range	Size	Maximum Capacity		Type Number
600 psig / 41.4 barg	2 to 600 psig / 0.1 to 41.4 barg	1/4 to 3/8 in. / 8 to 10 mm	2027 SCFH / 54 Nm^3h		**A-32** Brass, 303 SST
600 psig / 41.4 barg	10 to 600 psig / 0.7 to 41.4 barg	1/4 to 3/8 in. / 8 to 10 mm	2027 SCFH / 54 Nm^3h		**A-36** Bronze, 316 SST
600 psig / 41.4 barg	20 to 600 psig / 1.4 to 41.4 barg	1/2 in. / 15 mm	- - - -		**A-401** Bronze
400 psig / 27.6 barg	10 to 250 psig / 0.7 to 17.2 barg	1/4 to 2 in. / 8 to 50 mm	282 to 341,940 SCFH / 8 to 9164 Nm^3h		**B** Bronze
720 psig / 49.6 barg	10 to 600 psig / 0.7 to 41.4 barg	1/2 to 1 in. / 15 to 25 mm	240 to 57,600 SCFH / 6 to 1544 Nm^3h		**B-95** 316 SST
600 psig / 41.4 barg	0 to 600 psig / 0 to 41.4 barg	1/4 to 1-1/2 in. / 8 to 40 mm	132 to 7260 SCFH / 4 to 195 Nm^3h		**G-60** Bronze, 316 SST
400 psig / 27.6 barg	20 to 300 psig / 0.7 to 20.7 barg	1-1/4 to 2 in. / 32 to 50 mm	240 to 8400 SCFH / 6 to 225 Nm^3h		**E-55** Bronze
2400 psig / 165.5 barg	40 to 750 psig / 2.8 to 51.7 barg	1/2 to 3/4 in. / 15 to 20 mm	7500 to 42,000 SCFH / 201 to 1126 Nm^3h		**LS** Bronze

Backpressure Regulators (Economizers)

Maximum Inlet Pressure	Outlet Pressure Range	Size	Maximum Capacity		Type Number
400 psig / 27.6 barg	0 to 400 psig / 0 to 27.6 barg	1/2 to 2 in. / 15 to 50 mm	**Gas:** 420 to 90,000 SCFH / 11.3 to 2412 Nm^3h **Liquid:** 1.5 to 162 gpm		**FR** Bronze, 316 SST
600 psig / 41.4 barg	200 to 600 psig / 13.8 to 41.4 barg	1/2 to 2 in. / 15 to 50 mm	**Gas:** 3600 to 126,000 SCFH / 96.5 to 3376 Nm^3h **Liquid:** 10 to 162 gpm		**FR-6** Bronze, 316 SST
600 psig / 41.4 barg	2 to 600 psig / 0.1 to 41.4 barg	1/4 to 3/8 in. / 8 to 10 mm	**Gas:** 18 to 2100 SCFH / 0.5 to 56 Nm^3h **Liquid:** 0.2 to 1.5 gpm		**FRM** Brass, 316 SST, 303 SST

Pressure Build Economizers

Maximum Inlet Pressure	Outlet Pressure Range	Size	Maximum Capacity		Type Number
600 psig / 41.4 barg	15 to 600 psig / 1.0 to 41.4 barg	1/4 to 1/2 in. / 8 to 15 mm	- - - -		**PBE-1A** Brass
400 psig / 27.6 barg	10 to 400 psig / 0.7 to 27.6 barg	1/4 to 1/2 in. / 8 to 15 mm	- - - -		**PBE-2** Bronze, 316 SST
650 psig / 44.8 barg	0 to 600 psig / 0 to 41.4 barg	1/4 to 1/2 in. / 8 to 15 mm	- - - -		**PBE-5** Brass

Cryogenic

Low Temperature Cutoff

Maximum Inlet Pressure	Outlet Pressure Range	Size	Maximum Capacity		Type Number
400 psig / 27.6 barg	- - - -	1/2 to 2 in. / 15 to 50 mm	147,268 SCFH / 3947 Nm^3/h		**LTC** Bronze

Final Line

Maximum Inlet Pressure	Outlet Pressure Range	Size	Maximum Capacity		Type Number
400 psig / 27.6 barg	20 to 300 psig / 0.7 to 20.7 barg	1/2 to 2 in. / 15 to 50 mm	240 to 8400 SCFH / 6 to 225 Nm^3/h		**E-55** Bronze
300 psig / 20.7 barg	2 to 250 psig / 0.1 to 17.2 barg	1/8 to 3/8 in. / 6 to 10 mm	480 to 3240 SCFH / 13 to 87 Nm^3/h		**A-31** Brass
600 psig / 41.4 barg	20 to 600 psig / 1.4 to 41.4 barg	1/2 in. / 15 mm	- - - -		**A-401** Bronze

Cryogenic Bulletins

CASH VALVE™ A SERIES CRYOGENIC VALVES AND CONTROLS

A broad range of pressure build regulators, pressure reducing valves, final line gas valves and combination pressure build economizer valves for cryogenic service.

Type A32

FEATURES

- Seven models for pressure reducing or pressure build-up service.
- Five models for back-pressure service on economizer circuit.
- Three models for combined pressure building and economizer functions.
- Low temperature cut-off valves.
- Two models for final line gas service.
- High purity regulating valves for pressure reducing, back pressure and differential services.
- All parts commercially cleaned for cryogenic/oxygen service or high purity gas compatibility.
- Complementary 'Y' pattern strainers reduce maintenance costs.
- Cryogenic safety and shut-off valves also available.

GENERAL APPLICATION

A variety of controls for cryogenic systems including liquid and gas line-pressure build-up regulators, economizer (heat leak) back pressure valves, temperature safety valves, combination valves, shut-off valves and final-line/service-line regulators.

TECHNICAL DATA[1]

Materials:	Bronze, Brass and Stainless steel
Sizes:	¼ to ½ in. (8 to 15 mm)
Connections:	NPT and BSPT
Max initial pressure:	600 psig (41.4 bar)
Temperature ranges:	150 to -320°F (65 to -195°C)

1. Refer to General Specifications Table in page 3 for more information.

© 2019 Emerson. All Rights Reserved.

LIQUID-GAS DISTRIBUTION SYSTEM SCHEMATIC DIAGRAM

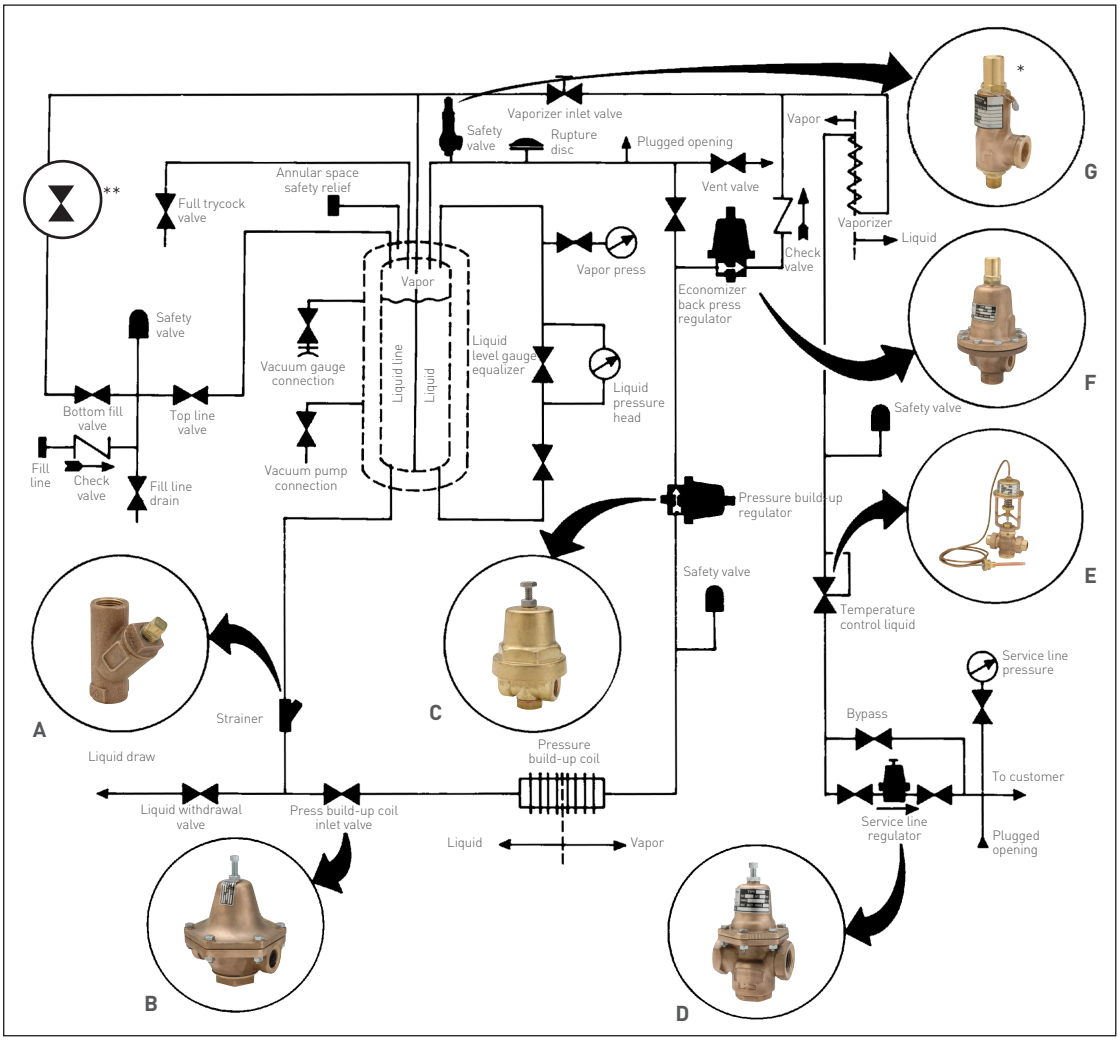

A. Type SY-70C
B. Type B
C. Type A-32
D. Type E-55
E. Type LTC
F. Type FR
G. Type C-776

* Type C-776 cryogenic safety relief valve - for additional information, write or call for data sheet VCTDS-00515.

** Shut-off valve - for additional information, see page 28.

OVERVIEW

Cryogenics - the science of materials at extremely low temperatures - has become increasingly important to industry. One important aspect of this field is the liquification of normally gaseous elements which are used widely throughout the industry, including:

Oxygen	- used extensively in BOF furnaces in the steel industry, for metal cutting, as a rocket fuel and in medicine.
Acetylene	- widely used in welding.
Nitrogen	- used in refrigeration systems, for metal degassing, in aerosol packaging and in cryogenic surgery.
Hydrogen	- used as a rocket propellant and in the production of several metals.
Argon	- widely used in incandescent lamps and fluorescent tubes.
Helium	- used for arc welding, in the manufacture of electron tubes and in cryogenic research.
Carbon Dioxide	- used in refrigeration, to make aerosol tanks and in fire fighting.

Other cryogenic fluids include liquefied natural gas, fluorine, krypton, neon, methane and ethane.

The extensive range of Cash valves and controls is suitable for use in all the major areas of cryogenic converters, or 'dewars', which are either stationary or installed in over-the-road transport vehicles.

GENERAL SPECIFICATIONS

Product	Service	Body Material	Spring Chamber Material	Body Size, in. (mm)	Materials		Maximum Inlet Pressure, psi (bar)	Maximum Outlet Pressure, psi (bar)	Temperature, °F (°C)
					Diaphragm	Seat (Disc)			
A-31	Final Line Gas	Brass	Brass or Aluminum	⅛ to ⅜ (6 to 10)	NBR, Neoprene, or EPR	PTFE, FKM or NBR	300 (20.7)	250 (17.2)	-40 to 180 (-40 to 82)
A-32	Cryogenic	Brass or 303 SST	Brass or Aluminum	¼ and ⅜ (8 and 10)	Bronze or 316 SST	PTFE	600 (41.4)	600 (41.4)	-320 to 150 (-195 to 65)
A-32S	Final Line Gas	Brass	Aluminum	¼ and ⅜ (8 and 10)	NBR or EPR	NBR or PTFE	600 (41.4)	600 (41.4)	-40 to 180 (-40 to 82)
A-36	Cryogenic	Bronze or 316 SST	Bronze or 316 SST	¼ and ⅜ (8 and 10)	Bronze or 316 SST	PTFE	600 (41.4)	600 (41.4)	-320 to 150 (-195 to 65)
A-401	Cryogenic	Bronze	Brass	½ (15)	Bronze	PTFE	600 (41.4)	600 (41.4)	-320 to 150 (-195 to 65)
	Final Line Gas	Bronze	Brass	½ (15)	Bronze or Neoprene	PTE or FKM	600 (41.4)	600 (41.4)	-20 to 180 (-29 to 82)

THE PRESSURE BUILD-UP CIRCUIT

The build-up circuit in the converter maintains a pressure of approximately 25 psi (1.72 bar) above that required to drive the liquid to the final vaporizer and a pressure differential of approximately 25 psi (1.72 bar) or higher across the service line regulator. To do this, liquid is drawn into the pressure build-up coil, where it is warmed by ambient air and vaporized. The gas then passes through the pressure build-up regulator and into the top of the tank, where it begins to build up pressure because expansion is limited by the fixed volume.
When this pressure reaches the pressure build-up regulator's set point, the regulator cuts off, stopping vaporization and pressure build-up. As liquid is forced from the tank to the final vaporizer, pressure in the tank begins to drop and the pressure build-up regulator returns to operation.

The pressure build-up regulator may be located in the liquid line before the pressure build-up coil. As it is now used for liquid rather than gas service, it may have a smaller orifice or be a smaller-sized valve. Its operation is the same as that of a gas regulator with the exception that it regulates the liquid flow before the pressure build-up coil rather than the gas flow after the coil. When pressure in the tank drops, the liquid pressure build-up regulator opens, allowing liquid to flow through the pressure build-up coil and vaporize.

Pressure build-up regulators are available for most cryogenic system applications. The Type A-32 is a small ¼ in. (8 mm) pressure build-up valve; the larger Types B, G-60 and E-55 can be used for either liquid or gas.

The Type B is available in sizes from ¼ to 2 in. (8 to 50 mm), the Type G-60 from ¼ to 1½ in. (8 to 40 mm) and the Type E-55 from 1 ¼ to 2 in. (32 to 50 mm).

A-32 PRESSURE REDUCING OR PRESSURE BUILD-UP SERVICE

Construction

Brass forged body; brass or aluminum spring chamber; brass trim; bronze or stainless steel diaphragms; Polytetrafluoroethylene (PTFE) seat disc and diaphragm gasket; stainless steel pressure spring. All parts are commercially cleaned for cryogenic service.

Note: Also available in stainless steel and special construction for hi-purity service. Contact your sales representative.

Temperature rating: 150 to -320°F (65 to -195°C)
Maximum initial pressure: 600 psi (41.4 bar)

PRESSURE RANGES

psi	bar
2 to 15	0.14 to 1.0
2 to 25	0.14 to 1.7
15 to 65	1.0 to 4.5
40 to 100	2.8 to 6.9
50 to 150	3.4 to 10.3
75 to 175	5.2 to 12.1
100 to 250	6.9 to 17.2
200 to 400	13.8 to 27.6
300 to 600	20.7 to 41.4

DIMENSIONS

Size		Dimensions						Shipping weight	
		A		B		C			
in.	mm	in.	mm	in.	mm	in.	mm	lbs	kg
¼	8	2.26	57.4	3.11	79.1	0.94	24.0	1 ⅛	0.51
⅜	10	2.26	57.4	3.11	79.1	0.94	24.0	1 ⅛	0.51

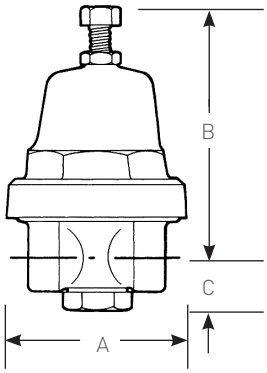

A-36 PRESSURE REDUCING OR PRESSURE BUILD-UP SERVICE

Construction

Bronze forged body and spring chamber; bronze diaphragms; PTFE seat disc and gaskets; stainless steel pressure spring and piston. All parts are commercially cleaned for cryogenic service.

Note: Also available in stainless steel and special construction for hi-purity service. Contact your sales representative.

Temperature rating: 150 to -320°F (65 to -195°C)
Maximum initial pressure: 600 psi (41.4 bar)

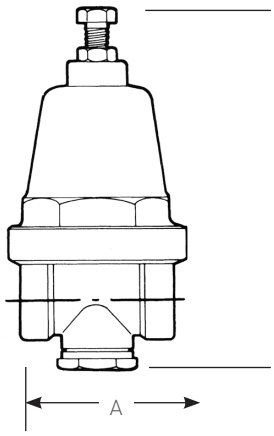

PRESSURE RANGES

psi	bar
10 to 30	0.69 to 2.1
20 to 50	1.4 to 3.4
40 to 80	2.8 to 5.5
75 to 150	5.2 to 10.3
100 to 250	6.9 to 17.2
200 to 400	13.8 to 27.6
300 to 600	20.7 to 41.4

DIMENSIONS

Size		Dimensions						Shipping weight	
		A		B		C			
in.	mm	in.	mm	in.	mm	in.	mm	lbs	kg
¼	8	2.81	71.3	4.40	112	0.97	24.6	2 ½	1.13
⅜	10	2.81	71.3	4.40	112	0.97	24.6	2 ½	1.13

A-401 PRESSURE REDUCING OR PRESSURE BUILD-UP SERVICE

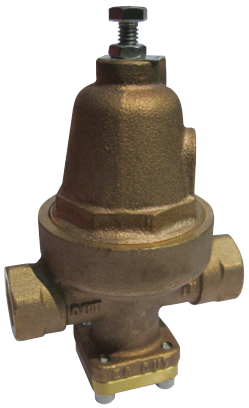

Construction

Bronze body and brass spring chamber; bronze diaphragms; PTFE seat disc and gaskets; stainless steel pressure spring. All parts are commercially cleaned for cryogenic service.

Temperature rating: 150 to -320°F (65 to -195°C)
Maximum initial pressure: 600 psi (41.4 bar)

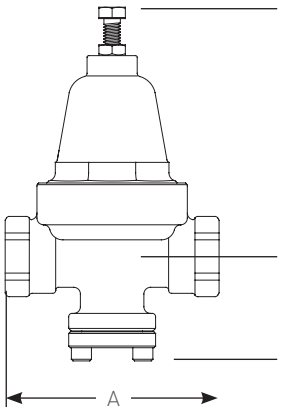

PRESSURE RANGES

psi	bar
20 to 60	1.4 to 4.1
40 to 80	2.6 to 5.5
75 to 125	5.2 to 8.6
100 to 250	6.9 to 17.2
200 to 400	13.8 to 27.6
300 to 600	20.7 to 41.4

DIMENSIONS

Size		Dimensions						Shipping weight	
		A		B		C			
in.	mm	in.	mm	in.	mm	in.	mm	lbs	kg
½	15	4.00	102	4.64	118	1.95	49.6	4 ½	1.68

STANDARD SPRING RANGES, psig (bar)

Spring Material	Type	1	2	3	4	5	6	7	8	9
SST	A32	2 to 15 (0.14 to 1.0)	2 to 25 (0.14 to 1.7)	15 to 65 (1.0 to 4.5)	40 to 100 (2.8 to 6.9)	50 to 150 (3.4 to 10.3)	75 to 175 (5.2 to 12.1)	100 to 250 (6.9 to 17.2)	200 to 400 (13.8 to 27.6)	300 to 600 (20.7 to 41.4)
	A36	10 to 30 (0.69 to 2.1)	20 to 50 (1.4 to 3.4)	40 to 80 (2.8 to 5.5)	75 to 150 (5.2 to 10.3)	100 to 250 (6.9 to 17.2)	200 to 400 (13.8 to 27.6)	300 to 600 (20.7 to 41.4)[1]	- - - -	- - - -
	A401	20 to 60 (1.4 to 3.4)	40 to 80 (2.8 to 5.5)	75 to 125 (5.2 to 8.6)	100 to 250 (6.9 to 17.2)	200 to 400 (13.8 to 27.6)	300 to 600 (20.7 to 41.4)	- - - -	- - - -	- - - -

1. Only available for Bronze body.

MODELS A32, A36, A401 SELECTION GUIDE

Example:	A36Z	B	C	S	Z	S	Z	T	H	01	–	E	1

Model
- **A32Z** A32 with bronze body
- **A32E** A32 with stainless steel body
- **A36Z** A36 (Bronze body)
- **A36G** A36 (SST body)
- **A401** A401

Size
- **A** ¼ in. (8 mm) (A32, A36)
- **B** ⅜ in. (10 mm) (A32, A36)
- **C** ½ in. (15 mm) (A401)

Service
- **C** Cryogenic
- **F** Final line gas (A401)

Body/connection style
- **S** Side inlet/side outlet - straight thru NPT
- **B** Side inlet/side outlet - straight thru BSPT

Spring chamber material
- **Z** Bronze spring chamber
- **B** Brass (bead blasted) spring chamber
- **G** SST spring chamber

Spring chamber style
- **S** Standard
- **V** Vented

Diaphragm material
- **G** 316 SST (A32, A36)
- **Z** Bronze

Seat material
- **T** PTFE
- **V** FKM (A401 final line only)

Pressure screw style
- **H** Hex

Variations
- **01** Standard

Design revision
- **(-)** Original design

Spring material
- **E** Stainless steel

Spring range

Refer to table above

CASH VALVE™ B SERIES CRYOGENIC VALVES AND CONTROLS

A broad range of pressure build regulators, pressure reducing valves, final line gas valves and combination pressure build economizer valves for cryogenic service.

Type B

FEATURES

- Seven models for pressure reducing or pressure build-up service.
- Five models for back-pressure service on economizer circuit.
- Three models for combined pressure building and economizer functions.
- Low temperature cut-off valves.
- Two models for final line gas service.
- High purity regulating valves for pressure reducing, back pressure and differential services.
- All parts commercially cleaned for cryogenic/oxygen service or high purity gas compatibility.
- Complementary 'Y' pattern strainers reduce maintenance costs.
- Cryogenic safety and shut-off valves also available.

GENERAL APPLICATION

A variety of controls for cryogenic systems including liquid and gas line-pressure build-up regulators, economizer (heat leak) back pressure valves, temperature safety valves, combination valves, shut-off valves and final-line/service-line regulators.

TECHNICAL DATA[1]

Materials:	Bronze and Stainless steel
Sizes:	¼ to 2 in. (8 to 50 mm)
Connections:	NPT, BSPT and BSPP
Max initial pressure:	720 psig (49.6 bar)
Temperature ranges:	150 to -320°F (65 to -195°C)

1. Refer to General Specifications Table in page 3 for more information.

© 2019 Emerson. All Rights Reserved.

LIQUID-GAS DISTRIBUTION SYSTEM SCHEMATIC DIAGRAM

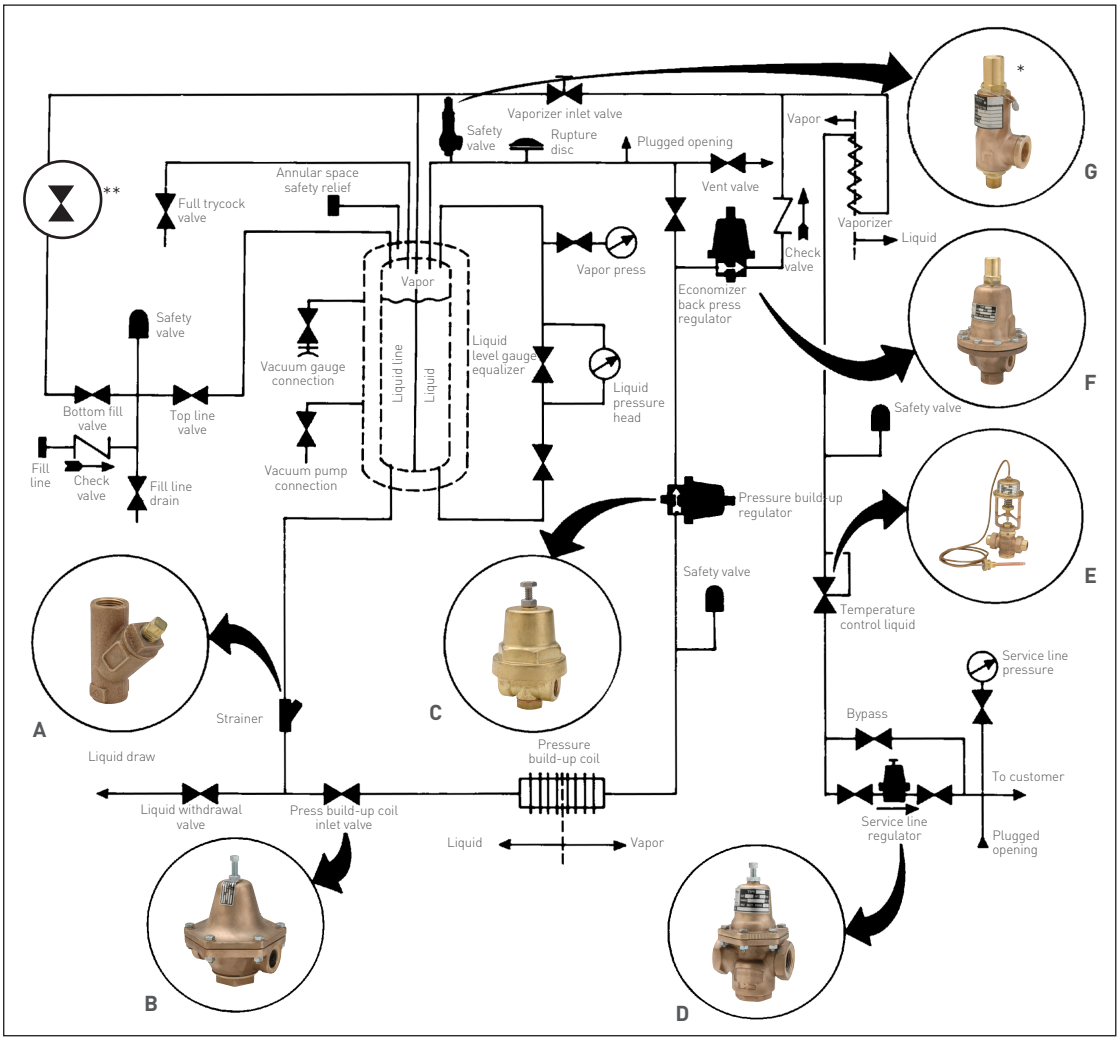

A. Type SY-70C
B. Type B
C. Type A-32
D. Type E-55
E. Type LTC
F. Type FR
G. Type C-776

* Type C-776 cryogenic safety relief valve - for additional information, write or call for data sheet VCTDS-00515.

** Shut-off valve - for additional information, see page 28.

OVERVIEW

Cryogenics - the science of materials at extremely low temperatures - has become increasingly important to industry. One important aspect of this field is the liquification of normally gaseous elements which are used widely throughout the industry, including:

Oxygen	- used extensively in BOF furnaces in the steel industry, for metal cutting, as a rocket fuel and in medicine.
Acetylene	- widely used in welding.
Nitrogen	- used in refrigeration systems, for metal degassing, in aerosol packaging and in cryogenic surgery.
Hydrogen	- used as a rocket propellant and in the production of several metals.
Argon	- widely used in incandescent lamps and fluorescent tubes.
Helium	- used for arc welding, in the manufacture of electron tubes and in cryogenic research.
Carbon Dioxide	- used in refrigeration, to make aerosol tanks and in fire fighting.

Other cryogenic fluids include liquefied natural gas, fluorine, krypton, neon, methane and ethane.

The extensive range of Cash valves and controls is suitable for use in all the major areas of cryogenic converters, or 'dewars', which are either stationary or installed in over-the-road transport vehicles.

GENERAL SPECIFICATIONS

Product	Service	Body Material	Spring Chamber Material	Body Size, in. (mm)	Materials		Maximum Inlet Pressure, psi (bar)	Maximum Outlet Pressure, psi (bar)	Temperature, °F (°C)
					Diaphragm	Seat (Disc)			
B	Cryogenic	Bronze	Bronze	¼ to 2 (8 to 50)	Bronze or 316 SST	PTFE	400 (27.6)	250 (17.2)	-320 to 150 (-195 to 65)
	Final Line Gas	Bronze	Bronze	¼ to 2 (8 to 50)	NBR	NBR or EPM	400 (27.6)	150 (10.3)	0 to 180 (-17 to 82)
B95	Cryogenic	316 SST	316 SST	½ (15)	316 SST	PTFE	720 (49.6)	600 (41.4)	-320 to 150 (-195 to 65)
				¾ (20)	316 SST	PTFE	720 (49.6)	250 (17.2)	-320 to 150 (-195 to 65)
				1 (25)	316 SST	PTFE	720 (49.6)	400 (27.6)	-320 to 150 (-195 to 65)
	Final Line Gas	316 SST	316 SST	½ (15)	NBR	NBR	720 (49.6)	600 (41.4)	0 to 150 (-17 to 65)
				¾ (20)	NBR	NBR	720 (49.6)	250 (17.2)	0 to 150 (-17 to 65)
				1 (25)	NBR	NBR	720 (49.6)	400 (27.6)	0 to 150 (-17 to 65)

B PRESSURE REDUCING OR PRESSURE BUILD-UP SERVICE

Construction

Bronze body, spring chamber, trim; bronze or stainless steel diaphragms; PTFE seat and diaphragm gasket; stainless steel pressure spring; stainless steel bolts and nuts; PTFE bottom-plug gasket; Monel® strainer screen. All parts are commercially cleaned for cryogenic service. Also available with BSP threads.

Temperature rating:	150 to -320°F (65 to -195°C)
Maximum initial pressure	
Type B:	400 psi (27.6 bar)
Type B95:	720 psi (49.6 bar)

Note: Type B95 available in stainless steel construction ½ to 1 in. (15 to 25 mm) size.

PRESSURE RANGES

Valve size		Maximum working ranges	
in.	mm	psi	bar
¼	8	10 to 30	0.69 to 2.1
		25 to 100	1.7 to 6.9
		50 to 200	3.4 to 13.8
		100 to 250	6.9 to 17.2
⅜	10	10 to 50	0.69 to 3.4
		40 to 150	2.8 to 10.3
		100 to 250	6.9 to 17.2
½	15	10 to 30	0.69 to 2.1
		20 to 75	1.4 to 5.2
		25 to 125	1.7 to 8.6
		100 to 200	6.9 to 13.8
		150 to 250	10.3 to 17.2
		250 to 400[1]	17.2 to 27.6[1]
		200 to 600[1]	13.8 to 41.4[1]
¾	20	10 to 30	0.69 to 2.1
		20 to 70	1.4 to 4.8
		30 to 100	2.1 to 6.9
		50 to 150	3.4 to 10.3
		100 to 225	6.9 to 15.5
		150 to 250	10.3 to 17.2
1	25	10 to 35	0.69 to 2.4
		20 to 60	1.4 to 4.1
		50 to 100	3.4 to 6.9
		50 to 150	3.4 to 10.3
		100 to 250	6.9 to 17.2
		200 to 400[1]	13.8 to 27.6[1]
1 ¼ and 1 ½	32 and 40	10 to 30	0.69 to 2.1
		20 to 40	1.4 to 2.8
		35 to 80	2.4 to 5.5
		75 to 150	5.2 to 10.3
2	50	5 to 20	0.34 to 1.4
		10 to 50	0.69 to 3.4
		20 to 100	1.4 to 6.9

1. Only available for Type B95.

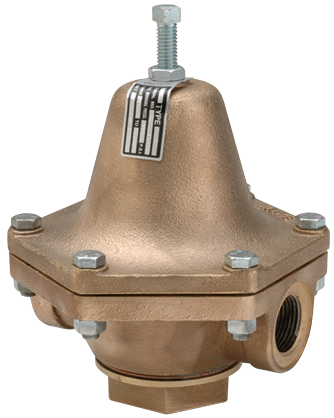

DIMENSIONS

Size		Dimensions						Shipping weight	
		A		B		C			
in.	mm	in.	mm	in.	mm	in.	mm	lbs	kg
¼	8	3.03	76.9	3.29	83.5	1.73	44	3	1.35
⅜	10	3.87	98.4	4.87	124	1.61	40.9	5 ½	2.47
½	15	4.47	114	5.26	134	1.97	50.1	8	3.6
¾	20	5.09	129	5.26	134	1.83	46.4	10	4.5
1	25	5.75	146	6.25	159	2.03	51.6	16	7.2
1 ¼	32	6.19	157	6.13	156	2.63	66.8	20	9.0
1 ½	40	6.19	157	6.38	162	2.63	66.8	20	9.0
2	50	9.19	233	8.50	216	3.5	88.9	37	16.65

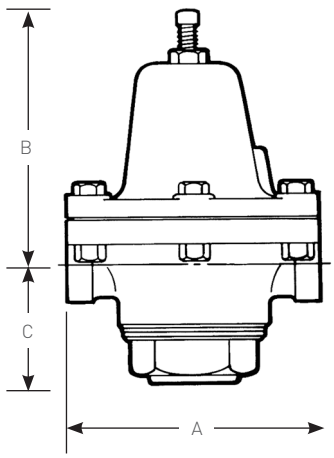

STANDARD SPRING RANGES, psig (bar)

Spring Material	Size in. (mm)	1	2	3	4	5	6
SST	¼ (8)	10 to 30 (0.69 to 2.1)	25 to 100 (1.7 to 6.9)	50 to 200 (3.4 to 13.8)	100 to 250 (6.9 to 17.2)	- - - -	- - - -
	⅜ (10)	10 to 50 (0.69 to 3.4)	40 to 150 (2.8 to 10.3)	100 to 250 (6.9 to 17.2)	- - - -	- - - -	- - - -
	½ (15)	10 to 30 (0.69 to 2.1)	20 to 75 (1.4 to 5.2)	25 to 125 (1.7 to 8.6)	100 to 200 (6.9 to 13.8)	150 to 250 (10.3 to 17.2)	- - - -
	¾ (20)	10 to 30 (0.69 to 2.1)	20 to 70 (1.4 to 4.8)	30 to 100 (2.1 to 6.9)	50 to 150 (3.4 to 10.3)	100 to 225 (6.9 to 15.5)	150 to 250 (10.3 to 17.2)
	1 (25)	10 to 35 (0.69 to 2.4)	20 to 60 (1.4 to 4.1)	50 to 100 (3.4 to 6.9)	50 to 150 (3.4 to 10.3)	100 to 250 (6.9 to 17.2)	- - - -
	1 ¼, 1 ½ (32, 40)	10 to 30 (0.69 to 2.1)	20 to 40 (1.4 to 2.8)	35 to 80 (2.4 to 5.5)	75 to 150 (5.2 to 10.3)	- - - -	- - - -
	2 (50)	5 to 20 (0.34 to 1.4)	10 to 50 (0.69 to 3.4)	20 to 100 (1.4 to 6.9)	- - - -	- - - -	- - - -
Steel	¼ (8)	2 to 25 (0.14 to 1.7)	20 to 60 (1.4 to 4.1)	30 to 100 (2.1 to 6.9)	50 to 150 (3.4 to 10.3)	- - - -	- - - -
	⅜ (10)	2 to 30 (0.14 to 2.1)	20 to 70 (1.4 to 4.8)	40 to 110 (2.8 to 7.6)	90 to 150 (6.2 to 10.3)	- - - -	- - - -
	½ (15)	2 to 30 (0.14 to 2.1)	10 to 50 (0.69 to 3.4)	30 to 125 (2.1 to 8.6)	50 to 150 (3.4 to 10.3)	- - - -	- - - -
	¾ (20)	2 to 20 (0.14 to 1.4)	10 to 35 (0.69 to 2.4)	30 to 75 (2.1 to 5.2)	50 to 110 (3.4 to 7.6)	105 to 150 (7.2 to 10.3)	- - - -
	1 (25)	2 to 20 (0.14 to 1.4)	10 to 45 (0.69 to 3.1)	20 to 60 (1.4 to 4.1)	55 to 100 (3.8 to 6.9)	90 to 150 (6.2 to 10.3)	- - - -
	1 ¼, 1 ½ (32, 40)	2 to 15 (0.14 to 1.0)	10 to 30 (0.69 to 2.1)	20 to 50 (1.4 to 3.4)	45 to 100 (3.1 to 6.9)	90 to 150 (6.2 to 10.3)	- - - -
	2 (50)	2 to 20 (0.14 to 1.4)	10 to 60 (0.69 to 4.1)	20 to 100 (1.4 to 6.9)	90 to 150 (6.2 to 10.3)	- - - -	- - - -

TYPE B SELECTION GUIDE

Example	B	Z	A	C	S	S	Z	T	S	01	–	E	1

Model
- **B** B valve

Material of construction
- **Z** Bronze

Valve size
- **A** ¼ in. (8 mm)
- **B** ⅜ in. (10 mm)
- **C** ½ in. (15 mm)
- **D** ¾ in. (20 mm)
- **E** 1 in. (25 mm)
- **F** 1 ¼ in. (32 mm)
- **G** 1 ½ in. (40 mm)
- **H** 2 in. (50 mm)

Service
- **C** Cryogenic
- **F** Final line gas (O_2 clean adder required)

Body style/connection style
- **S** Side inlet/side outlet - straight thru with NPT connections
- **B** Side inlet/side outlet - straight thru with BSPT connections
- **C** Side inlet/side outlet - straight thru with copper tube connections (⅜ in. only)

Spring chamber style
- **S** Standard
- **D** with pressure screw cap and differential connection

Diaphragm material
- **B** NBR (final line)
- **Z** Bronze (cryogenic)

Seat material
- **B** NBR (final line gas)
- **T** PTFE (cryogenic)

Pressure screw style
- **S** Standard

Variation
- **01** Standard

Design revision
- **(-)** Indicates original design

Spring material
- **D** Steel (final line gas)
- **E** SST (cryogenic)

Spring range

Refer to table above

STANDARD SPRING RANGES, psig (bar)

Spring Material	Size, in. (mm)	1	2	3	4	5	6	7
SST	½ (15)	10 to 30 (0.69 to 2.1)	20 to 75 (1.4 to 5.2)	25 to 125 (1.7 to 8.6)	100 to 200 (6.9 to 13.8)	150 to 250 (10.3 to 17.2)	250 to 400 (17.2 to 27.6)	200 to 600 (13.8 to 41.4)
	¾ (20)	10 to 30 (0.69 to 2.1)	20 to 70 (1.4 to 4.8)	30 to 100 (2.1 to 6.9)	50 to 150 (3.4 to 10.3)	100 to 225 (6.9 to 15.5)	150 to 250 (10.3 to 17.2)	- - - -
	1 (25)	10 to 35 (0.69 to 2.4)	20 to 60 (1.4 to 4.1)	50 to 100 (3.4 to 6.9)	50 to 150 (3.4 to 10.3)	100 to 250 (6.9 to 17.2)	200 to 400 (13.8 to 27.6)	- - - -

TYPE B95 SELECTION GUIDE

Example:	B95	G	C	C	S	S	G	T	S	01	-	E	1

Model
B95 B95 valve

Material of construction
G 316 SST body and chamber

Valve size
C ½ in. (15 mm)
D ¾ in. (20 mm)
E 1 in. (25 mm)

Service
C Cryogenic

Body style/connection style
S Side inlet/side outlet - straight thru with NPT connections

Spring chamber style
S Standard
D with pressure screw cap and differential connection

Diaphragm material
G 316 SST (cryogenic)

Seat material
T PTFE (cryogenic)

Pressure screw style
S Standard

Variation
01 Standard

Design revision
(-) Indicates original design

Spring material
E Stainless steel

Spring range
Refer to table above

CASH VALVE™ TYPE E55 CRYOGENIC VALVES AND CONTROLS

A broad range of pressure build regulators, pressure reducing valves, final line gas valves and combination pressure build economizer valves for cryogenic service.

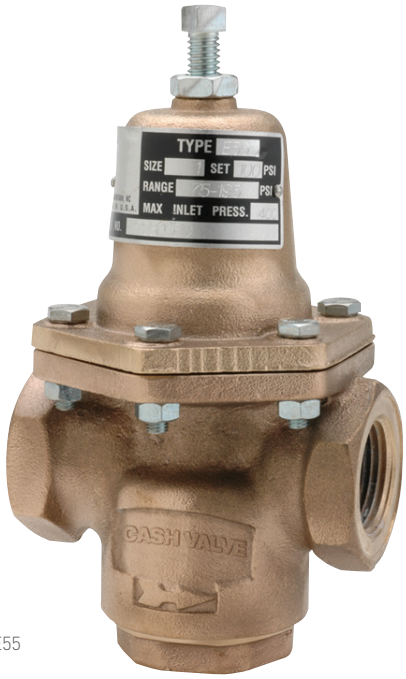

Type E55

FEATURES

- Seven models for pressure reducing or pressure build-up service.
- Five models for back-pressure service on economizer circuit.
- Three models for combined pressure building and economizer functions.
- Low temperature cut-off valves.
- Two models for final line gas service.
- High purity regulating valves for pressure reducing, back pressure and differential services.
- All parts commercially cleaned for cryogenic/oxygen service or high purity gas compatibility.
- Complementary 'Y' pattern strainers reduce maintenance costs.
- Cryogenic safety and shut-off valves also available.

GENERAL APPLICATION

A variety of controls for cryogenic systems including liquid and gas line-pressure build-up regulators, economizer (heat leak) back pressure valves, temperature safety valves, combination valves, shut-off valves and final-line/service-line regulators.

TECHNICAL DATA[1]

Materials:	Bronze
Sizes:	½ to 2 in. (15 to 50 mm)
Connections:	NPTF and BSPT
Max initial pressure:	400 psig (27.6 bar)
Temperature ranges:	150 to -320°F (65 to -195°C)

1. Refer to General Specifications Table in page 3 for more information.

© 2019 Emerson. All Rights Reserved.

LIQUID-GAS DISTRIBUTION SYSTEM SCHEMATIC DIAGRAM

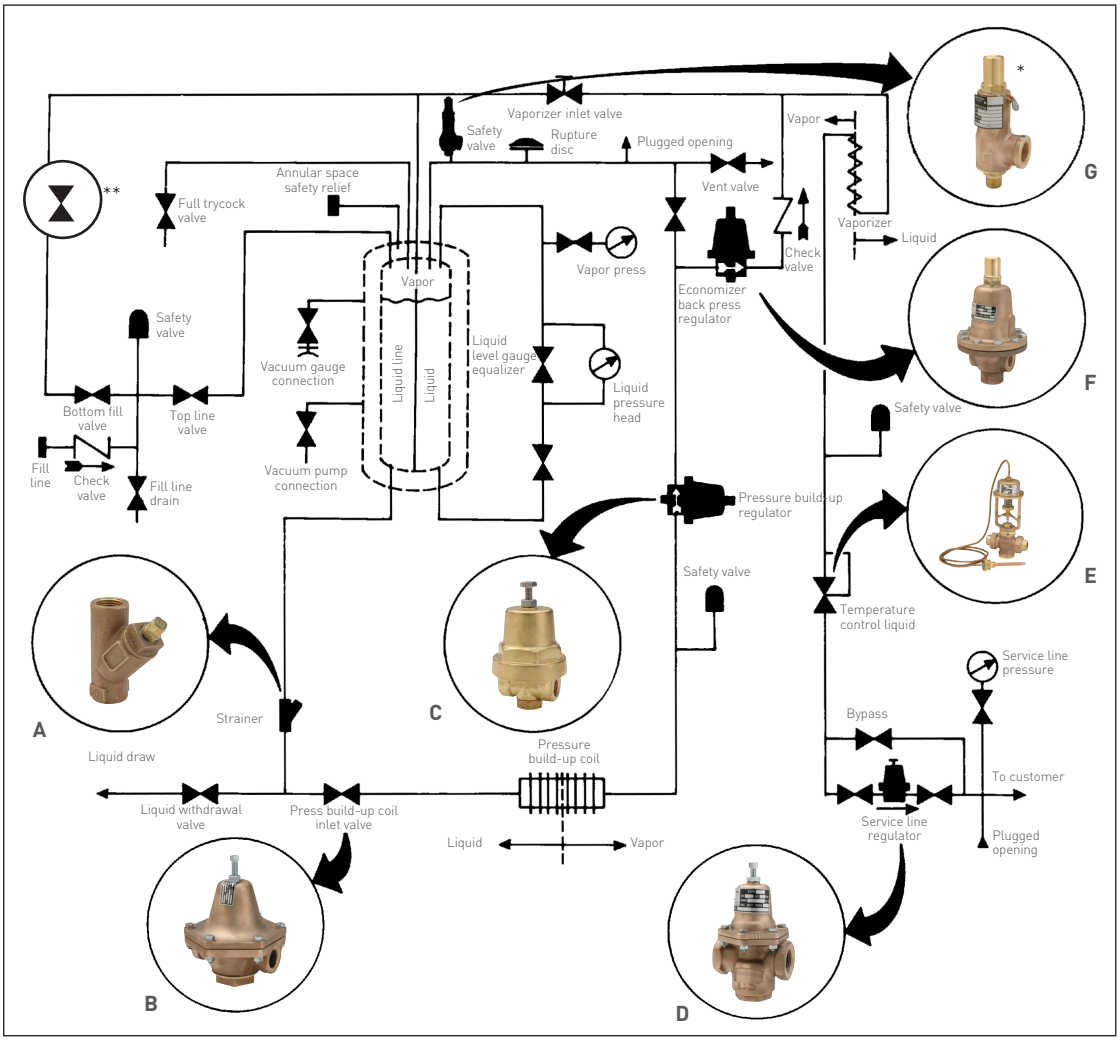

A. Type SY-70C
B. Type B
C. Type A-32
D. Type E-55
E. Type LTC
F. Type FR
G. Type C-776

* Type C-776 cryogenic safety relief valve - for additional information, write or call for data sheet VCTDS-00515.

** Shut-off valve - for additional information, see page 28.

OVERVIEW

Cryogenics - the science of materials at extremely low temperatures - has become increasingly important to industry. One important aspect of this field is the liquification of normally gaseous elements which are used widely throughout the industry, including:

Oxygen	- used extensively in BOF furnaces in the steel industry, for metal cutting, as a rocket fuel and in medicine.
Acetylene	- widely used in welding.
Nitrogen	- used in refrigeration systems, for metal degassing, in aerosol packaging and in cryogenic surgery.
Hydrogen	- used as a rocket propellant and in the production of several metals.
Argon	- widely used in incandescent lamps and fluorescent tubes.
Helium	- used for arc welding, in the manufacture of electron tubes and in cryogenic research.
Carbon Dioxide	- used in refrigeration, to make aerosol tanks and in fire fighting.

Other cryogenic fluids include liquefied natural gas, fluorine, krypton, neon, methane and ethane.

The extensive range of Cash valves and controls is suitable for use in all the major areas of cryogenic converters, or 'dewars', which are either stationary or installed in over-the-road transport vehicles.

GENERAL SPECIFICATIONS

Product	Service	Body Material	Spring Chamber Material	Body Size, in. (mm)	Materials: Diaphragm	Materials: Seat (Disc)	Maximum Inlet Pressure, psi (bar)	Maximum Outlet Pressure, psi (bar)	Temperature, °F (°C)
E-55	Cryogenic	Bronze	Bronze	1 ¼ to 2 (32 to 50)	316 SST	PTFE	400 (27.6)	300 (20.7)	-320 to 150 (-195 to 65)
	Final Line Gas	Bronze	Bronze	½ to 1 (15 to 25)	Neoprene	PTE or FKM	400 (27.6)	250 (17.2)	0 to 150 (-17 to 65)
				1 ¼ to 2 (32 to 50)	Neoprene	FKM	400 (27.6)	300 (20.7)	0 to 150 (-17 to 65)

E-55 PRESSURE REDUCING, PRESSURE BUILD-UP OR FINAL-LINE GAS SERVICE

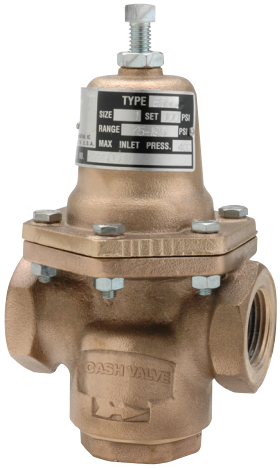

Construction - for pressure reducing or pressure build-up service

Bronze body, spring chamber, trim; stainless steel body seat and pressure spring; PTFE seat, O-rings and bottom plug gasket; stainless steel diaphragms, strainer screen and bolts. All parts are commercially cleaned for cryogenic service. Also available with BSP threads.

Size range: 1 ¼, 1 ½, 2 in. (32, 40, 50 mm)
Temperature rating: 150 to -320°F (65 to -195°C)
Maximum initial pressure: 400 psi (27.6 bar)

Construction - for final-line gas service

Bronze body, spring chamber and trim; stainless steel body seat and pressure spring; FKM and PTFE seat disc and PTFE bottom plug gasket; FKM O-ring and neoprene diaphragm with PTFE and FKM liner; Monel® strainer screen. All parts are commercially cleaned for oxygen service. Also available with BSP threads.

Size range: ½, ¾, 1, 1 ¼, 1 ½, 2 in. (15, 20, 25, 32, 40, 50 mm)
Temperature rating: 0 to 150°F (-17 to 65°C)
Maximum initial pressure: 400 psi (27.6 bar)

Note: Specification for final-line gas service is not for use on cold gas or liquid (less than 0°F).

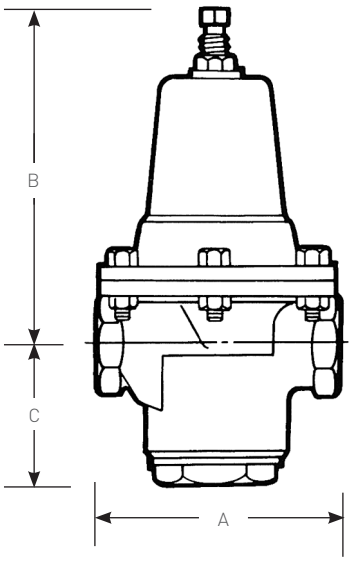

STANDARD SPRING RANGES

Spring Material	Valve size in.	Valve size mm	Maximum working ranges psi	Maximum working ranges bar
SST	½, ¾, 1[1]	15, 20, 25[1]	10 to 35	0.69 to 2.4
			20 to 75	1.4 to 5.2
			75 to 125	5.2 to 8.6
			125 to 175	8.6 to 12.1
			75 to 250	5.2 to 17.2
	1 ¼, 1 ½, 2	32, 40, 50	20 to 70	0.69 to 4.8
			50 to 150	3.4 to 10.3
			75 to 175	5.2 to 12.1
			75 to 200	5.2 to 13.8
			150 to 300	10.3 to 20.7

1. Not applicable for Cryogenic service.

DIMENSIONS

Size in.	Size mm	Dimensions A in.	Dimensions A mm	Dimensions B in.	Dimensions B mm	Dimensions C in.	Dimensions C mm	Shipping weight lbs	Shipping weight kg
½	15	4.00	102	5.52	140	2.13	54.2	6	2.7
¾	20	4.00	102	5.31	135	2.19	55.6	6	2.7
1	25	4.00	102	5.53	140	2.13	54.2	6	2.7
1 ¼	32	5.50	140	8.75	222	3.16	80.2	17	7.7
1 ½	40	5.50	140	8.75	222	3.16	80.2	17	7.7
2	50	5.75	146	9.12	232	2.79	70.9	17	7.7

TYPE E-55 SELECTION GUIDE

Example:	E55	C	C	S	G	T	01	-	E	1

Model

E55 E-55 valve with bronze body and spring chamber

Valve size

C	½ in. (15 mm)	**F**	1 ¼ in. (32 mm)
D	¾ in. (20 mm)	**G**	1 ½ in. (40 mm)
E	1 in. (25 mm)	**H**	2 in. (50 mm)

Service

C Cryogenic (1 ¼ to 2 in.)

F Final line gas (all sizes)

Body style/connection style

S Side inlet/side outlet - straight thru with NPT connections

B Side inlet/side outlet - straight thru with BSPT connections

C Side inlet/side outlet - straight thru with NPT connections (enlarged port) 1 in. E-55 only

D Side inlet/side outlet - straight thru with BSPT connections (enlarged port) 1 in. E-55 only

Diaphragm material

G 316 SST (cryogenic) (1 ¼ to 2 in.)

N Neoprene with FKM diaphragm liner (final line gas)

L Neoprene with PTFE diaphragm liner (final line gas)

Seat material

T PTFE (cryogenic)

V FKM (final line gas)

Variation

01 Standard

Design revision

(-) Indicates original design

Spring material

E SST

Spring range

Refer to table on page 12

CASH VALVE™ TYPE FR CRYOGENIC VALVES AND CONTROLS

A broad range of pressure build regulators, pressure reducing valves, final line gas valves and combination pressure build economizer valves for cryogenic service.

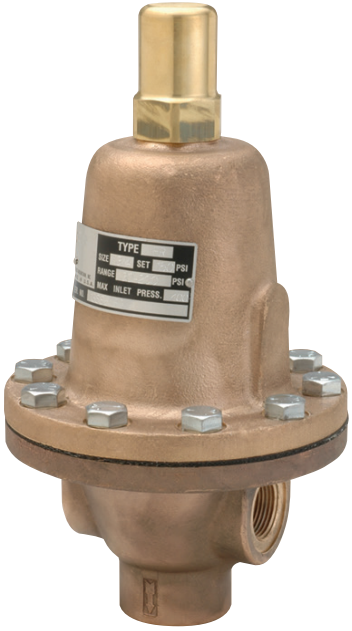

Type FR

FEATURES

- Seven models for pressure reducing or pressure build-up service.
- Five models for back-pressure service on economizer circuit.
- Three models for combined pressure building and economizer functions.
- Low temperature cut-off valves.
- Two models for final line gas service.
- High purity regulating valves for pressure reducing, back pressure and differential services.
- All parts commercially cleaned for cryogenic/oxygen service or high purity gas compatibility.
- Complementary 'Y' pattern strainers reduce maintenance costs.
- Cryogenic safety and shut-off valves also available.

GENERAL APPLICATION

A variety of controls for cryogenic systems including liquid and gas line-pressure build-up regulators, economizer (heat leak) back pressure valves, temperature safety valves, combination valves, shut-off valves and final-line/service-line regulators.

TECHNICAL DATA[1]

Materials:	Bronze and Stainless steel
Sizes:	½ to ¾ in. (15 to 20 mm)
Connections:	NPTF
Max initial pressure:	400 psig (27.6 bar)
Temperature ranges:	150 to -320°F (65 to -195°C)

1. Refer to General Specifications Table in page 3 for more information.

© 2019 Emerson. All Rights Reserved.

LIQUID-GAS DISTRIBUTION SYSTEM SCHEMATIC DIAGRAM

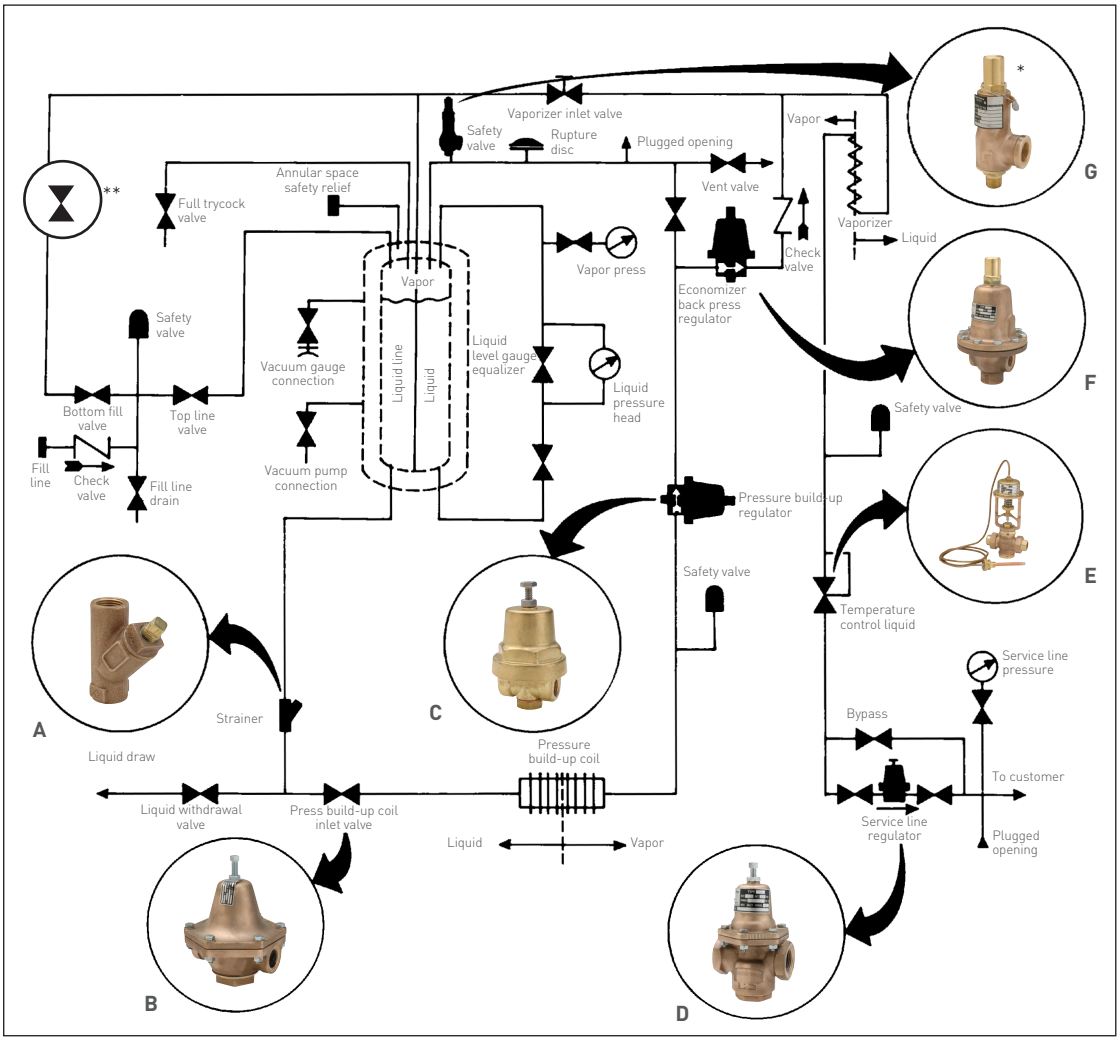

A. Type SY-70C
B. Type B
C. Type A-32
D. Type E-55
E. Type LTC
F. Type FR
G. Type C-776

* Type C-776 cryogenic safety relief valve - for additional information, write or call for data sheet VCTDS-00515.

** Shut-off valve - for additional information, see page 28.

OVERVIEW

Cryogenics - the science of materials at extremely low temperatures - has become increasingly important to industry. One important aspect of this field is the liquification of normally gaseous elements which are used widely throughout the industry, including:

Oxygen	- used extensively in BOF furnaces in the steel industry, for metal cutting, as a rocket fuel and in medicine.
Acetylene	- widely used in welding.
Nitrogen	- used in refrigeration systems, for metal degassing, in aerosol packaging and in cryogenic surgery.
Hydrogen	- used as a rocket propellant and in the production of several metals.
Argon	- widely used in incandescent lamps and fluorescent tubes.
Helium	- used for arc welding, in the manufacture of electron tubes and in cryogenic research.
Carbon Dioxide	- used in refrigeration, to make aerosol tanks and in fire fighting.

Other cryogenic fluids include liquefied natural gas, fluorine, krypton, neon, methane and ethane.

The extensive range of Cash valves and controls is suitable for use in all the major areas of cryogenic converters, or 'dewars', which are either stationary or installed in over-the-road transport vehicles.

GENERAL SPECIFICATIONS

Product	Service	Body Material	Spring Chamber Material	Body Size, in. (mm)	Materials		Maximum Inlet Pressure, psi (bar)	Maximum Outlet Pressure, psi (bar)	Temperature, °F (°C)
					Diaphragm	Seat (Disc)			
FR	Cryogenic	Bronze or 316 SST	Bronze or 316 SST	½ to 2 (15 to 50)	Bronze or 316 SST	PTFE	400 (27.6)	400 (27.6)	-320 to 150 (-195 to 65)
	Cryogenic/High Purity	316L SST	316 SST	¾ to 1 (20 to 25)	SST	SST	600 (41.4)	600 (41.4)	-425 to 400 (-254 to 204)
FR-6	Cryogenic	Bronze or 316 SST	Bronze or 316 SST	½ to 2 (15 to 50)	Bronze or 316 SST	PTFE	600 (41.4)	600 (41.4)	-320 to 150 (-195 to 65)

FR, FR-6 BACK PRESSURE OR ECONOMIZER SERVICE

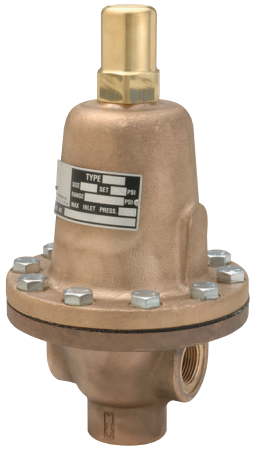

Construction

Threaded ends; 3-way, 2 side inlets-bottom outlet; bronze or stainless steel body, spring chamber and diaphragms; brass or stainless steel body seat; stainless steel seat disc, seat ring and pressure spring; PTFE O-ring and diaphragm gasket; stainless steel bolts; pressure-tight closing cap. All parts are commercially cleaned for cryogenic service. Also available with BSP threads.

FR Series valves are available in various pressure control and temperature ranges and are designated as follows:

- Type FR has a bronze body as standard, is suitable for pressure of 0 to 400 psig (0 to 27.6 barg) and maximum temperatures 150 to 450°F (65 to 232°C)[1].
- Type FR-6 incorporates a diaphragm ring mounted above the diaphragm to accomodate higher back pressure ranges: 200 to 600 psig (13.8 to 41 barg); 150 to 450°F (65 to 232°C)[1].

1. Requires special diaphragm ring and pressure plate.

Note: Also available in stainless steel and special construction for hi-purity systems. Contact your sales representative.

Temperature rating: 150 to -320°F (65 to -195°C)

STANDARD SPRING RANGES, psig (bar)

Spring Material	Type	Size, in. (mm)	1	2	3	4	5	6
SST	FR	½ (15)	0 to 20 (0 to 1.4)	10 to 50 (0.69 to 3.4)	40 to 90 (2.8 to 6.2)	75 to 200 (5.2 to 13.8)	100 to 300 (6.9 to 20.7)	100 to 400 (6.9 to 27.6)
		¾ (20)	0 to 10 (0 to 0.69)	0 to 15 (0 to 1.0)	10 to 70 (0.69 to 4.8)	50 to 175 (3.4 to 12.1)	100 to 265 (6.9 to 18.3)	- - - -
		1 (25)	0 to 15 (0 to 1.0)	10 to 35 (0.69 to 2.4)	20 to 75 (1.4 to 5.2)	40 to 200 (2.8 to 13.8)	50 to 250 (3.4 to 17.2)	- - - -
		1 ¼ (32)	0 to 15 (0 to 1.0)	10 to 30 (0.69 to 2.1)	20 to 85 (1.4 to 5.9)	40 to 125 (2.8 to 8.6)	50 to 250 (3.4 to 17.2)	- - - -
		1 ½, 2 (40, 50)	0 to 15 (0 to 1.0)	5 to 20 (0.34 to 1.4)	10 to 55 (0.69 to 3.8)	30 to 100 (2.1 to 6.9)	40 to 160 (2.8 to 11.0)	100 to 250 (6.9 to 17.2)
	FR-6	½ (15)	200 to 600 (13.8 to 41.4)	- - - -	- - - -	- - - -	- - - -	- - - -
		¾, 1, 1 ¼, 1 ½, 2 (20, 25, 32, 40, 50)	200 to 400 (13.8 to 27.6)	- - - -	- - - -	- - - -	- - - -	- - - -

MAXIMUM INITIAL PRESSURE

Type	psi	bar
FR-½ in. (15 mm)	400	27.6
FR-¾ in. (20 mm)	265	18.3
FR-1 to 2 in. (25 to 50 mm)	250	17.2
FR-6	400	27.6
	600	41.4

Maximum set pressure: See below. For higher pressures, contact your sales representative.

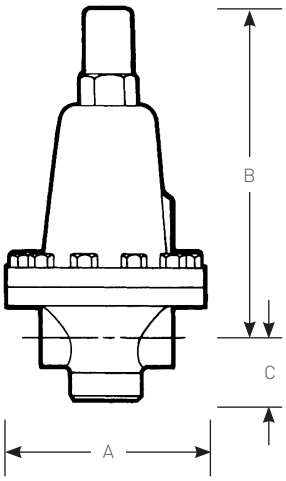

DIMENSIONS

Size		Dimensions						Shipping weight	
		A		B		C			
in.	mm	in.	mm	in.	mm	in.	mm	lbs	kg
½	15	4.75	121	6.73	171	1.62	41.1	9 ½	4.27
¾	20	5.63	143	7.92	201	2.00	50.8	14 ¾	6.64
1	25	6.50	165	10.26	261	2.25	57.2	23 ½	10.58
1 ¼	32	6.50	165	10.39	264	2.38	60.5	24 ½	11.03
1 ½	40	7.50	191	10.76	273	2.63	66.8	33	14.85
2	50	7.50	191	11.01	280	3.00	76.2	35 ½	15.98

FR SERIES SELECTION GUIDE

Example	FR-	Z	A	W	S	S	Z	Z	B	H	01	–	E	1

Model
- **FR-** FR
- **FR6** FR-6

Material of construction
- **Z** Bronze (FR, FR-6)
- **G** 316 SST (FR, FR-6)

Valve size
- **C** ½ in. (15 mm)
- **D** ¾ in. (20 mm)
- **E** 1 in. (25 mm)
- **F** 1 ¼ in. (32 mm)
- **G** 1 ½ in. (40 mm)
- **H** 2 in. (50 mm)

Service
- **C** Cryogenic service

Body/connection style
- **S** 2 side inlets/bottom outlet - with NPT connections

Spring chamber style
- **S** Standard
- **C** with pressure screw cap
- **D** with differential connection
- **V** Vented
- **W** Vent in wall / no cap

Spring chamber material
- **Z** Bronze
- **G** 316 Stainless steel

Diaphragm material
- **Z** Bronze (cryogenic)
- **G** 316 Stainless steel (cryogenic)

Body seat material
- **E** 303 Stainless steel
- **G** 316 Stainless steel
- **Z** Brass

Pressure screw style
- **S** Standard

Variation
- **04** 303 Stainless steel trim with PTFE O-ring and diaphragm gasket (ball seat, seat ring)
- **14** 316 Stainless steel trim with PTFE O-ring and diaphragm gasket (ball seat, seat ring)

Design revision
- **(-)** Indicates original design

Spring material
- **E** Stainless steel

Spring range

Refer to table on page 17

CASH VALVE™ TYPE FRM CRYOGENIC VALVES AND CONTROLS

A broad range of pressure build regulators, pressure reducing valves, final line gas valves and combination pressure build economizer valves for cryogenic service.

Type FRM

FEATURES

- Seven models for pressure reducing or pressure build-up service.
- Five models for back-pressure service on economizer circuit.
- Three models for combined pressure building and economizer functions.
- Low temperature cut-off valves.
- Two models for final line gas service.
- High purity regulating valves for pressure reducing, back pressure and differential services.
- All parts commercially cleaned for cryogenic/oxygen service or high purity gas compatibility.
- Complementary 'Y' pattern strainers reduce maintenance costs.
- Cryogenic safety and shut-off valves also available.

GENERAL APPLICATION

A variety of controls for cryogenic systems including liquid and gas line-pressure build-up regulators, economizer (heat leak) back pressure valves, temperature safety valves, combination valves, shut-off valves and final-line/service-line regulators.

TECHNICAL DATA[1]

Materials:	Bronze and Stainless steel
Sizes:	¼ to 3/8 in. (8 to 10 mm)
Connections:	NPT, BSPT
Max initial pressure:	600 psig (41.4 bar)
Temperature ranges:	150 to -320°F (65 to -195°C)

1. Refer to General Specifications Table in page 3 for more information.

© 2019 Emerson. All Rights Reserved.

LIQUID-GAS DISTRIBUTION SYSTEM SCHEMATIC DIAGRAM

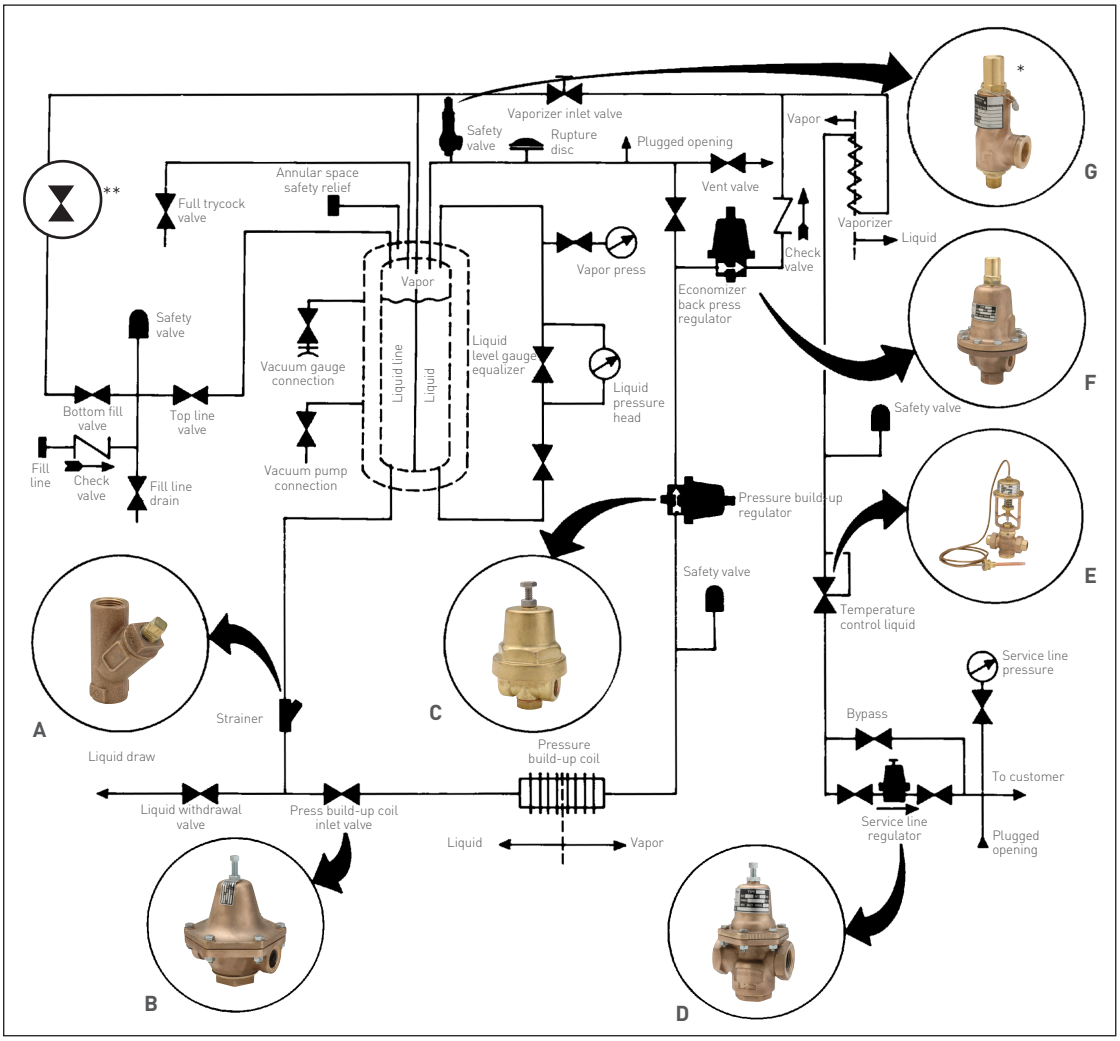

A. Type SY-70C
B. Type B
C. Type A-32
D. Type E-55
E. Type LTC
F. Type FR
G. Type C-776

* Type C-776 cryogenic safety relief valve - for additional information, write or call for data sheet VCTDS-00515.

** Shut-off valve - for additional information, see page 28.

OVERVIEW

Cryogenics - the science of materials at extremely low temperatures - has become increasingly important to industry. One important aspect of this field is the liquification of normally gaseous elements which are used widely throughout the industry, including:

Oxygen	- used extensively in BOF furnaces in the steel industry, for metal cutting, as a rocket fuel and in medicine.
Acetylene	- widely used in welding.
Nitrogen	- used in refrigeration systems, for metal degassing, in aerosol packaging and in cryogenic surgery.
Hydrogen	- used as a rocket propellant and in the production of several metals.
Argon	- widely used in incandescent lamps and fluorescent tubes.
Helium	- used for arc welding, in the manufacture of electron tubes and in cryogenic research.
Carbon Dioxide	- used in refrigeration, to make aerosol tanks and in fire fighting.

Other cryogenic fluids include liquefied natural gas, fluorine, krypton, neon, methane and ethane.

The extensive range of Cash valves and controls is suitable for use in all the major areas of cryogenic converters, or 'dewars', which are either stationary or installed in over-the-road transport vehicles.

GENERAL SPECIFICATIONS

Product	Service	Body Material	Spring Chamber Material	Body Size, in. (mm)	Materials		Maximum Inlet Pressure, psi (bar)	Maximum Outlet Pressure, psi (bar)	Temperature, °F (°C)
					Diaphragm	Seat (Disc)			
FRM	Cryogenic	Brass, 316 SST or 303 SST	Brass or Chrome Plated Brass	¼ and ⅜ (8 and 10)	Bronze or 316 SST	- - - -	600 (41.4)	600 (41.4)	-320 to 150 (-195 to 65)
FRM-2	Cryogenic	Brass or 316 SST	Brass or 316 SST	¼ to ½ (8 to 15)	Bronze or 316 SST	- - - -	600 (41.4)	600 (41.4)	-320 to 150 (-195 to 65)

THE ECONOMIZER CIRCUIT

The economizer back pressure regulator is set from 10 to 25 psi (0.69 to 1.7 bar) above the set pressure of the pressure build-up regulator. When no gas is being used and heat leakage in the tank causes a gas pressure build-up, the excess pressure is by-passed into the final vaporizer line to conserve gas rather than allow the safety valve in the pressure build-up circuit to relieve the excess gas into the atmosphere.

Five types of back pressure valves are available for this circuit: the Type FRM, low flows, maximum of 600 psi (41.4 bar); Type FRM-2, medium flows, maximum of 400 psi (27.6 bar); Type FRM-2 (HP) high pressure, medium flows, maximum of 600 psi (41.4 bar); Type FR, large flows, maximum of 400 psi (27.6 bar) and the Type FR-6, maximum of 600 psi (41.4 bar).

FRM BACK PRESSURE OR ECONOMIZER SERVICE

Construction

Threaded ends; 2-way, side inlet-side outlet; 2-way, side inlet-bottom outlet; 3-way, 2 side inlets-bottom outlet; forged brass body; bronze diaphragms; stainless steel seat disc, seat ring and pressure spring; PTFE diaphragm gasket. All parts commercially cleaned for cryogenic service.

Note: Also available in stainless steel and special construction for hi-purity service. Contact your sales representative.

Temperature rating: 150 to -320°F (65 to -195°C)
Maximum set pressure: 600 psi (41.4 bar)

PRESSURE RANGES

psi	bar
2 to 25	0.14 to 1.7
15 to 65	1.0 to 4.5
40 to 100	2.8 to 6.9
50 to 150	3.4 to 10.3
75 to 175	5.2 to 12.1
100 to 250	6.9 to 17.2
200 to 400	13.8 to 27.6
200 to 600	13.8 to 41.4
300 to 600	20.7 to 41.4

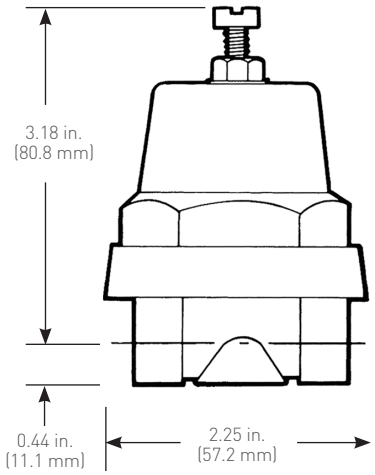

DIMENSIONS

Description	Size		Shipping weight	
	in.	mm	lbs	kg
Side inlet, side outlet	¼	8	1⅛	0.51
Side inlet, side outlet	⅜	10	1⅛	0.51
Side inlet, bottom outlet	¼	8	1⅛	0.51
Side inlet, bottom outlet	⅜	10	1⅛	0.51
2 Side inlets, bottom outlet	¼	8	1⅛	0.51
2 Side inlets, bottom outlet	⅜	10	1⅛	0.51

* Use valve numbers for pressures to 175 psi (12.1 bar) only. Consult factory for other numbers.

FRM-2, FRM-2 (HP) BACK PRESSURE OR ECONOMIZER SERVICE

Construction

Threaded ends; 2-way, side inlet-side outlet; 2-way, side inlet-bottom outlet; 3-way, 2 side inlets-bottom outlet; forged brass body; brass spring chamber; stainless steel seat disc, seat ring and pressure spring; bronze diaphragms; PTFE diaphragm gasket. All parts commercially cleaned for cryogenic service.

Note: FRM-2 available in stainless steel and special construction for hi-purity service. Contact your sales representative.

Temperature rating:	150 to -320°F (65 to -195°C)
Maximum set pressure	
FRM-2:	400 psi (27.6 bar)
FRM-2HP:	600 psi (41.4 bar)

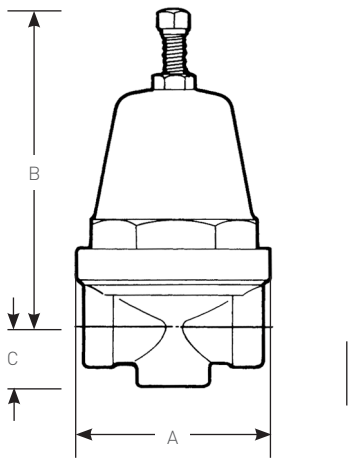

PRESSURE RANGES

Size	Maximum working ranges	
	psi	bar
FRM-2		
All sizes	0 to 30	0 to 2.1
All sizes	20 to 50	1.4 to 3.5
All sizes	40 to 80	2.8 to 5.5
All sizes	75 to 150	5.2 to 10.3
All sizes	100 to 275	6.9 to 19.0
	200 to 400	13.8 to 27.6
FRM-2HP		
All sizes	300 to 600	20.7 to 41.4

DIMENSIONS

Description	Size		Dimensions						Shipping weight	
			A		B		C			
	in.	mm	in.	mm	in.	mm	in.	mm	lbs	kg
FRM-2										
Side inlet, side outlet	¼	8	2.81	71.4	4.45	113	0.78	19.8	2 ½	1.13
Side inlet, side outlet	⅜	10	2.81	71.4	4.69	119	0.78	19.8	2 ½	1.13
Side inlet, side outlet	½	15	2.96	75.2	4.79	122	1.13	28.7	3 ½	1.58
Side inlet, bottom outlet	¼	8	2.81	71.4	4.45	113	0.78	19.8	2 ½	1.13
Side inlet, bottom outlet	⅜	10	2.81	71.4	4.69	119	0.78	19.8	2 ½	1.13
Side inlet, bottom outlet	½	15	2.96	75.2	4.79	122	1.13	28.7	3 ½	1.58
2 Side inlets, bottom outlet	¼	8	2.81	71.4	4.45	113	0.78	19.8	2 ½	1.13
2 Side inlets, bottom outlet	⅜	10	2.81	71.4	4.69	119	0.78	19.8	2 ½	1.13
2 Side inlets, bottom outlet	½	15	2.96	75.2	4.79	122	1.13	28.7	3 ½	1.58
FRM-2HP										
Side inlet, side outlet	¼	8	2.81	71.4	4.45	113	0.78	19.8	2 ½	1.13
Side inlet, bottom outlet	¼	8	2.81	71.4	4.45	113	0.78	19.8	2 ½	1.13
Side inlet, side outlet	⅜	10	2.81	71.4	4.69	119	0.78	19.8	2 ½	1.13
Side inlet, bottom outlet	⅜	10	2.81	71.4	4.69	119	0.78	19.8	2 ½	1.13
Side inlet, side outlet	½	15	2.96	75.2	4.79	122	1.13	28.7	3 ½	1.58
Side inlet, bottom outlet	½	15	2.96	75.2	4.79	122	1.13	28.7	3 ½	1.58

STANDARD SPRING RANGES, psig (bar)

Spring Material	Model	1	2	3	4	5	6	7	8	9
SST	FRM	2 to 25 (0.14 to 1.7)	15 to 65 (1.0 to 4.5)	40 to 100 (2.8 to 6.9)	50 to 150 (3.4 to 10.3)	75 to 175 (5.2 to 12.1)	100 to 250 (6.9 to 17.2)	200 to 400 (13.8 to 27.6)	200 to 600 (13.8 to 41.4)	300 to 600 (20.7 to 41.4)
	FRM-2	0 to 30 (0 to 2.1)	20 to 50 (1.4 to 3.5)	40 to 80 (2.8 to 5.5)	75 to 150 (5.2 to 10.3)	100 to 275 (6.9 to 19.0)	200 to 400 (13.8 to 27.6)	300 to 600 (20.7 to 41.4)	- - - -	- - - -

FRM, FRM-2 SELECTION GUIDE

Example:	FRM-	A	W	Z	S	A	S	B	F	02	–	D	1

Model
- **FRM-** FRM
- **FRM2** FRM-2

Size
- **A** ¼ in. (8 mm) (all)
- **B** ⅜ in. (10 mm) (all)
- **C** ½ in. (15 mm) (FRM-2)

Service
- **C** Cryogenic (FRM, FRM-2)

Material of construction
- **Z** Brass
- **G** 316 SST (FRM, FRM-2)
- **E** 303 SST (FRM)

Body/connection style
- **S** Side inlet/side outlet (all) NPT
- **R** 2 side inlets/bottom outlet (FRM, FRM-2) NPT
- **E** Side inlet/bottom outlet (FRM, FRM-2) NPT
- **B** Side inlet/side outlet (BSPT)
- **P** Side inlet/side outlet ¼ NPT - 0.082 wall pipe (FRM-2)
- **T** Side inlet/side outlet ⅜ NPT - 0.035 wall pipe (FRM-2)
- **V** Side inlet/side outlet ⅝ NPT - 0.049 wall pipe (FRM-2)

Spring chamber material
- **Z** Brass spring chamber
- **G** SST spring chamber (FRM-2)
- **C** Chrome plated

Spring chamber style
- **S** Standard
- **W** Without vent hole

Diaphragm material
- **G** 316 SST
- **Z** Bronze

Pressure screw style
- **F** Fillister (FRM only)
- **H** Hex
- **T** T-handle (FRM)

Variations
- **03** 303 Stainless steel trim with PTFE diaphragm gasket (metal diaphragms only)
- **04** 303 Stainless steel trim with 6 x 0.005 thick bronze diaphragms
- **05** 303 Stainless steel trim with Nylon inserted locknut
- **13** 316 Stainless steel trim with PTFE diaphragm gasket (metal diaphragms only)
- **23** Monel® trim with PTFE diaphragm gasket (metal diaphragms only)
- **32** Remote sensing

Design revision
- **(-)** Original design

Spring material
- **E** Stainless steel

Spring range

Refer to table above

CASH VALVE™ TYPE G-60 CRYOGENIC VALVES AND CONTROLS

A broad range of pressure build regulators, pressure reducing valves, final line gas valves and combination pressure build economizer valves for cryogenic service.

Type G-60

FEATURES

- Seven models for pressure reducing or pressure build-up service.
- Five models for back-pressure service on economizer circuit.
- Three models for combined pressure building and economizer functions.
- Low temperature cut-off valves.
- Two models for final line gas service.
- High purity regulating valves for pressure reducing, back pressure and differential services.
- All parts commercially cleaned for cryogenic/oxygen service or high purity gas compatibility.
- Complementary 'Y' pattern strainers reduce maintenance costs.
- Cryogenic safety and shut-off valves also available.

GENERAL APPLICATION

A variety of controls for cryogenic systems including liquid and gas line-pressure build-up regulators, economizer (heat leak) back pressure valves, temperature safety valves, combination valves, shut-off valves and final-line/service-line regulators.

TECHNICAL DATA[1]

Materials:	Bronze and Stainless steel
Sizes:	¼ to 1½ in. (8 to 40 mm)
Connections:	NPT and BWE
Max initial pressure:	600 psig (41.4 bar)

Temperature ranges

Standard range:	150 to -320°F (65 to -195°C)
High purity valves:	400 to -425°F (204 to -254°C)

1. Refer to General Specifications Table in page 3 for more information.

© 2019 Emerson. All Rights Reserved.

LIQUID-GAS DISTRIBUTION SYSTEM SCHEMATIC DIAGRAM

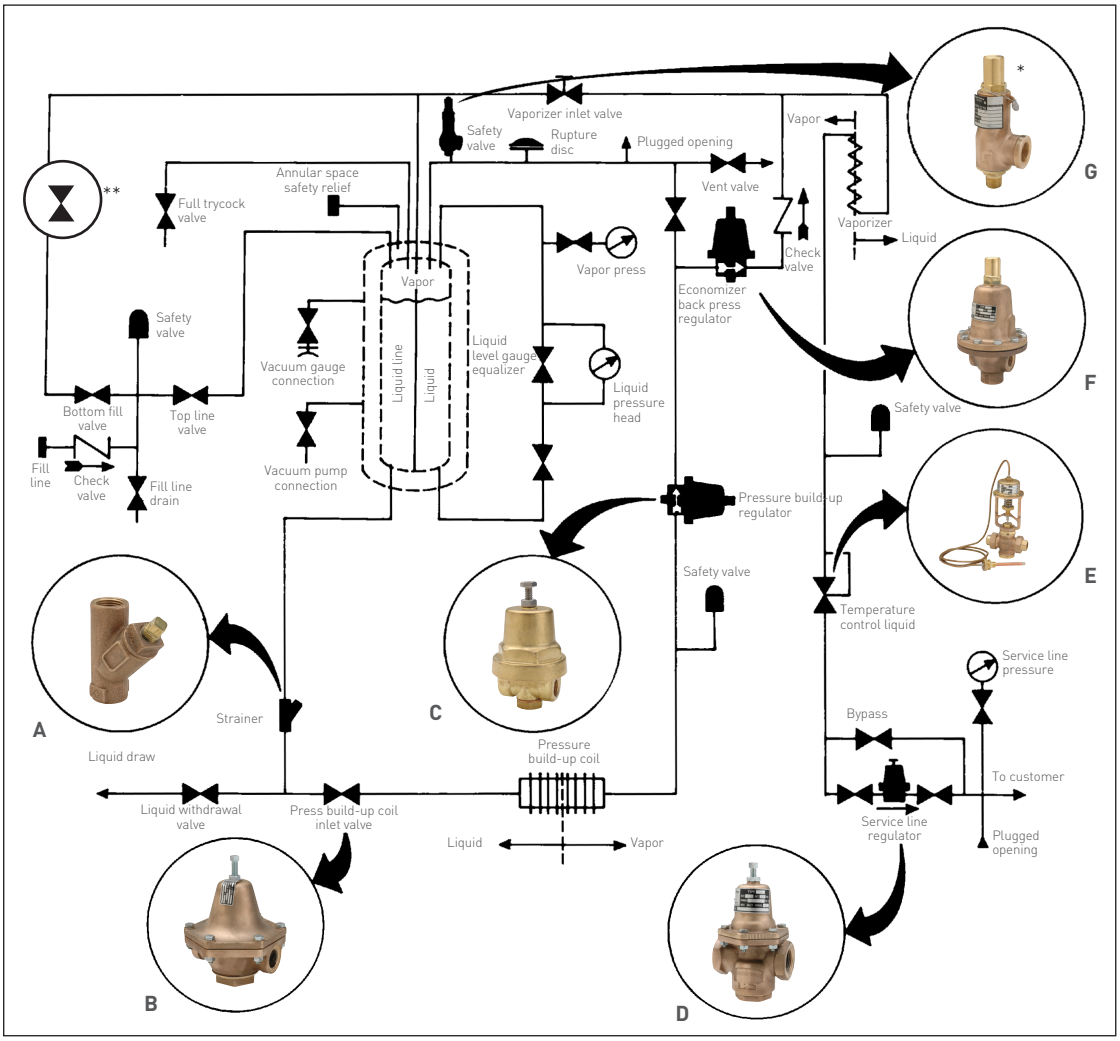

A. Type SY-70C
B. Type B
C. Type A-32
D. Type E-55
E. Type LTC
F. Type FR
G. Type C-776

* Type C-776 cryogenic safety relief valve - for additional information, write or call for data sheet VCTDS-00515.

** Shut-off valve - for additional information, see page 28.

OVERVIEW

Cryogenics - the science of materials at extremely low temperatures - has become increasingly important to industry. One important aspect of this field is the liquification of normally gaseous elements which are used widely throughout the industry, including:

Oxygen	- used extensively in BOF furnaces in the steel industry, for metal cutting, as a rocket fuel and in medicine.
Acetylene	- widely used in welding.
Nitrogen	- used in refrigeration systems, for metal degassing, in aerosol packaging and in cryogenic surgery.
Hydrogen	- used as a rocket propellant and in the production of several metals.
Argon	- widely used in incandescent lamps and fluorescent tubes.
Helium	- used for arc welding, in the manufacture of electron tubes and in cryogenic research.
Carbon Dioxide	- used in refrigeration, to make aerosol tanks and in fire fighting.

Other cryogenic fluids include liquefied natural gas, fluorine, krypton, neon, methane and ethane.

The extensive range of Cash valves and controls is suitable for use in all the major areas of cryogenic converters, or 'dewars', which are either stationary or installed in over-the-road transport vehicles.

GENERAL SPECIFICATIONS

Product	Service	Body Material	Spring Chamber Material	Body Size, in. (mm)	Materials		Maximum Inlet Pressure, psi (bar)	Maximum Outlet Pressure, psi (bar)	Temperature, °F (°C)
					Diaphragm	Seat (Disc)			
G-60	Cryogenic	Bronze or 316 SST	Bronze or 316 SST	¼ to 1 ½ (8 to 40)	Bronze or 316 SST	PTFE	600 (41.4)	600 (41.4)	-320 to 150 (-195 to 65)
	Cryogenic/High Purity	316L SST	316L SST	½ (15)	SST	Kel-F/PTFE	400 (27.6)	400 (27.6)	-425 to 400 (-254 to 204)
	Final Line Gas	Bronze	Bronze or 316 SST	¼ to 1 ½ (8 to 40)	Bronze, 316 SST, Monel® or NBR	PTFE, FKM or NBR	400 (27.6)	400 (27.6)	-20 to 180 (-29 to 82)
		316 SST	Bronze or 316 SST	¼ to 1 ½ (8 to 40)	Bronze, 316 SST, Monel® or NBR	PTFE, FKM or NBR	700 (48.3)	600 (41.4)	-20 to 180 (-29 to 82)

G-60 PRESSURE REDUCING OR PRESSURE BUILD-UP SERVICE

Construction

Threaded ends; bronze body, spring chamber, diaphragms; brass trim; stainless steel pressure spring and body seat; PTFE seat and gaskets; stainless steel bolts. Closing cap over screw provided. Also available with all system exposed internal parts in stainless steel. All parts are commercially cleaned for cryogenic service. Also available with BSP threads.

Note: Also available in stainless steel and special construction for hi-purity service.
Contact your sales representative.

Temperature rating: 150 to -320°F (65 to -195°C)
Maximum initial pressure: 600 psi (41.4 bar)

STANDARD SPRING RANGES

Spring Material	Valve size in.	Valve size mm	Maximum working ranges psi	Maximum working ranges bar
SST	¼ and ⅜	8 and 10	5 to 30	0.34 to 2.1
			15 to 65	1.0 to 5.2
			30 to 110	2.1 to 7.6
			75 to 200	5.2 to 13.8
			100 to 400[1]	6.9 to 27.6[1]
			100 to 600[1]	6.9 to 41.4[1]
	½	15	0 to 7	0 to 0.48
			5 to 70	0.34 to 4.8
			50 to 150	3.4 to 10.3
			50 to 250	3.4 to 17.2
			100 to 400	6.9 to 27.6
			200 to 500	13.8 to 34.5
	¾	20	0 to 10	0 to 0.69
			5 to 75	0.34 to 5.2
			50 to 200	3.4 to 13.8
			100 to 400[1]	6.9 to 27.6[1]
			100 to 600[1]	6.9 to 41.4[1]
	1	25	10 to 50	0.69 to 3.4
			50 to 200	3.4 to 13.8
			100 to 400[1]	6.9 to 27.6[1]
			100 to 600[1]	6.9 to 41.4[1]
	1 ¼ and 1 ½	32 and 40	5 to 15	0.34 to 1.0
			10 to 50	0.69 to 3.4
			30 to 75	2.1 to 5.2
			50 to 120	3.4 to 8.3
			75 to 150	5.2 to 10.3
			100 to 400[1]	6.9 to 27.6[1]

NOTE

1. Higher ranges are attained by modifying standard valve and/or using a different pressure spring. Contact your sales representative.

DIMENSIONS

Size in.	Size mm	Dimensions A in.	Dimensions A mm	Dimensions B in.	Dimensions B mm	Dimensions C in.	Dimensions C mm	Shipping weight lbs	Shipping weight kg
¼	8	4.00	102	6.23	158	2.15	54.6	9	4.05
⅜	10	4.00	102	6.48	165	2.15	54.6	9	4.05
½	15	4.75	121	7.63	194	2.30	58.4	16	7.20
¾	20	5.63	143	9.90	251	2.60	66.0	24	10.80
1	25	6.50	165	10.70	272	2.80	71.1	35	15.75
1 ¼	32	8.00	203	12.30	312	3.53	89.7	62 ½	28.35
1 ½	40	8.00	203	12.00	305	3.53	89.7	62 ½	28.35

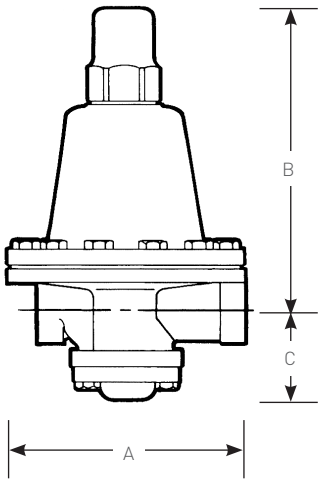

TYPE G60 SELECTION GUIDE

Example:	G60Z	A	W	S	S	Z	Z	B	H	00	-	E	1

Model

G60Z G60 with bronze body
G60G G60 with 316 stainless steel body

Valve size

A ¼ in. (8 mm)
B ⅜ in. (10 mm)
C ½ in. (15 mm)
D ¾ in. (20 mm)
E 1 in. (25 mm)
F 1 ¼ in. (32 mm)
G 1 ½ in. (40 mm)

Service

C Cryogenic service
F Final line gas (O_2 clean but not used in cryogenic service)
L Cryogenic/High Purity service

Body/connection style

S Side inlet/side outlet - straight thru with NPT connections

Spring chamber style

S Standard
C with pressure screw cap
D with pressure screw cap and differential connection
V Vented
W Vented with pressure screw cap

Spring chamber material

L 316L SST - Hi Purity
Z Bronze
G 316 stainless steel

Diaphragm material

B NBR (final line gas)
Z Bronze (cryogenic)
G 316 stainless steel (cryogenic)
L NBR with PTFE liner (final line gas)

Seat material

T PTFE (cryogenic)
V FKM (final line gas)

Pressure screw style

S Standard

Variation

01 Standard (303 stainless steel trim)
(303 SST seat ring, 303 SST pusher post button, 303 SST pusher post, 303 SST guide bushing, 303 SST piston and 316 SST bottom cap)
31 Brass trim
(303 SST seat ring, brass pusher post button, brass pusher post, 303 SST guide bushing, brass piston and bronze bottom cap)

Design revision

(-) Indicates original design

Spring material

E Stainless steel

Spring range

Refer to table on page 10

CASH VALVE™ LTC SERIES CRYOGENIC VALVES AND CONTROLS

A broad range of pressure build regulators, pressure reducing valves, final line gas valves and combination pressure build economizer valves for cryogenic service.

LTC Series

FEATURES

- Seven models for pressure reducing or pressure build-up service.
- Five models for back-pressure service on economizer circuit.
- Three models for combined pressure building and economizer functions.
- Low temperature cut-off valves.
- Two models for final line gas service.
- High purity regulating valves for pressure reducing, back pressure and differential services.
- All parts commercially cleaned for cryogenic/oxygen service or high purity gas compatibility.
- Complementary 'Y' pattern strainers reduce maintenance costs.
- Cryogenic safety and shut-off valves also available.

GENERAL APPLICATION

A variety of controls for cryogenic systems including liquid and gas line-pressure build-up regulators, economizer (heat leak) back pressure valves, temperature safety valves, combination valves, shut-off valves and final-line/service-line regulators.

TECHNICAL DATA[1]

Materials:	Bronze
Sizes:	½ to 2 in. (15 to 50 mm)
Connections:	NPT and BSPT
Max initial pressure:	400 psig (27.6 bar)
Temperature ranges:	0 to -40°F (-18 to -40°C)

1. Refer to General Specifications Table in page 3 for more information.

© 2019 Emerson. All Rights Reserved.

LIQUID-GAS DISTRIBUTION SYSTEM SCHEMATIC DIAGRAM

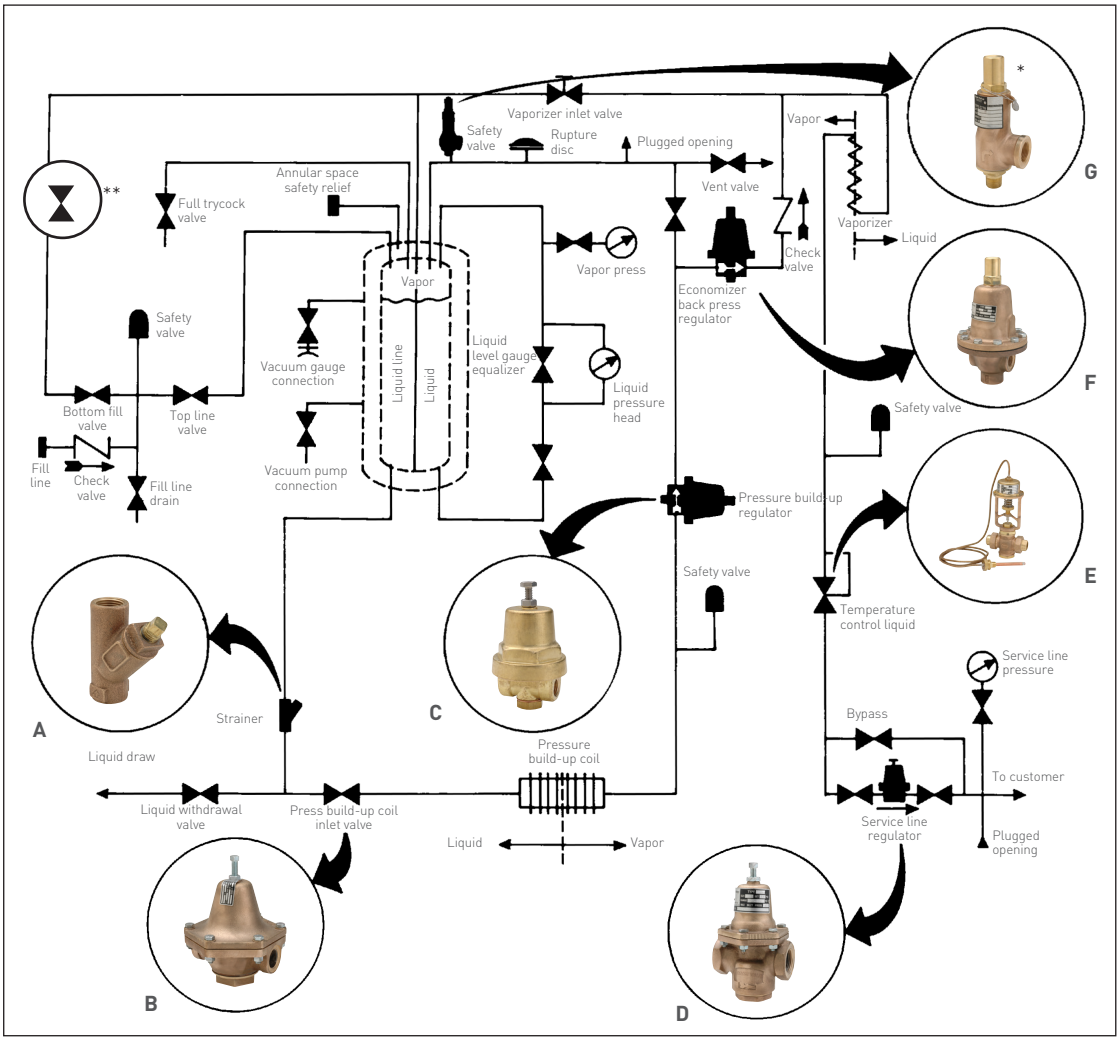

A. Type SY-70C
B. Type B
C. Type A-32
D. Type E-55
E. Type LTC
F. Type FR
G. Type C-776

* Type C-776 cryogenic safety relief valve - for additional information, write or call for data sheet VCTDS-00515.

** Shut-off valve - for additional information, see page 28.

OVERVIEW

Cryogenics - the science of materials at extremely low temperatures - has become increasingly important to industry. One important aspect of this field is the liquification of normally gaseous elements which are used widely throughout the industry, including:

Oxygen	- used extensively in BOF furnaces in the steel industry, for metal cutting, as a rocket fuel and in medicine.
Acetylene	- widely used in welding.
Nitrogen	- used in refrigeration systems, for metal degassing, in aerosol packaging and in cryogenic surgery.
Hydrogen	- used as a rocket propellant and in the production of several metals.
Argon	- widely used in incandescent lamps and fluorescent tubes.
Helium	- used for arc welding, in the manufacture of electron tubes and in cryogenic research.
Carbon Dioxide	- used in refrigeration, to make aerosol tanks and in fire fighting.

Other cryogenic fluids include liquefied natural gas, fluorine, krypton, neon, methane and ethane.

The extensive range of Cash valves and controls is suitable for use in all the major areas of cryogenic converters, or 'dewars', which are either stationary or installed in over-the-road transport vehicles.

GENERAL SPECIFICATIONS

Product	Service	Body Material	Spring Chamber Material	Body Size, in. (mm)	Materials		Maximum Inlet Pressure, psi (bar)	Maximum Outlet Pressure, psi (bar)	Temperature, °F (°C)
					Diaphragm	Seat (Disc)			
LTC	Cryogenic	Bronze	Bronze	½ to 2 (15 to 50)	Bronze	PTFE	400 (27.6)	400 (27.6)	-40 to 0 (-40 to -18)

LOW TEMPERATURE CUT-OFF VALVES

The temperature control valve between the vaporizer and service line regulator is designed to cut off the gas flow if the gas temperature drops below a pre-determined point, usually -20°F (-29°C), often caused by a rapid or quick gas draw. If the temperature drops below the temperature control valve's setting, the valve closes to prevent excessively cold gas from reaching the service end of the system. In particular, the cold gas is prevented from contacting the final-line regulator, which is not constructed or intended for such low-temperature conditions. The valve opens automatically when gas temperature rises above the set point.

The Type LTC temperature control valve is a double-port valve with a range of 0 to -40°F (-18 to -40°C) for low temperature cut-off. As it is subject to ambient temperature under normal conditions, it will normally be in a wide-open position. A copper well is recommended for each installation, which allows the removal of the capillary bulb without depressurizing the system.

Note: Valve seat closure may take several seconds under normal operating conditions. In addition, Type LTC fails in the closed position.

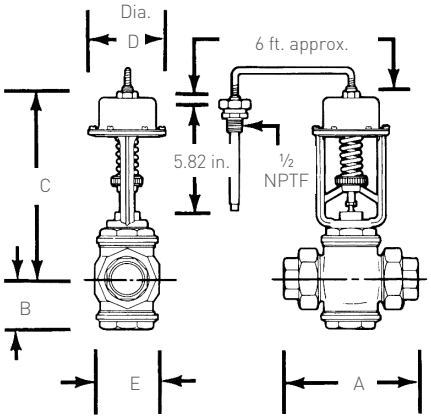

LTC REVERSE-ACTING TEMPERATURE REGULATOR FOR CRYOGENIC SERVICE

Construction

Brass union ends; bronze body and trim; copper capillary armor and bellows; PTFE gasket and packing; stainless steel spring; copper bulb and capillary.
Copper bulb is ½ x 5.82 in. (15 x 147.83 mm). All parts are commercially cleaned for oxygen service.
A copper well is available as an option and is recommended for each cryogenic application.

Maximum operating limits

Operating temperature range is 0 to -40°F (-18 to -40°C); standard setting is -20°F (-29°C).
Maximum temperature limit is 300°F (149°C); minimum temperature limit is -320°F (-196°C).
Maximum body pressure on all sizes is 400 psi (27.6 bar); however, for proper operation, maximum pressure differentials as shown on page 24 must be observed.

DIMENSIONS

Size		Dimensions									
		A		B		C		D		E	
in.	mm	in.	mm	in.	mm	in.	mm	in.	mm	in.	mm
½	15	6.04	153.42	2.08	52.84	9.80	248.92	4.31	109.48	2.50	63.50
¾	20	6.04	153.42	2.08	52.84	9.80	248.92	4.31	109.48	2.50	63.50
1	25	6.04	153.42	2.08	52.84	9.80	248.92	4.31	109.48	2.50	63.50
1¼	32	7.61	193.30	2.75	69.85	10.47	265.94	4.31	109.48	3.56	90.43
1½	40	7.61	193.30	2.75	69.85	10.47	265.94	4.31	109.48	3.56	90.43
2	50	8.58	217.43	3.12	79.25	10.84	275.34	4.31	109.48	4.31	109.48

Note: Also available: Separable well - ask for part number 17960.
Thermal system repair kit - ask for part number 18052.

TYPE LTC MAXIMUM PRESSURE DIFFERENTIALS

Valve size		Temperature setting					
		0°F	-18°C	-20°F	-29°C	-40°F	-40°C
in.	mm	psi	bar	psi	bar	psi	bar
½ to ¾	15 to 20	400	27.6	400	27.6	400	27.6
1	25	275	19.0	400	27.6	400	27.6
1¼ to 1½	32 to 40	275	19.0	350	24.1	350	24.1
2	50	275	19.0	275	19.0	300	24.1

Note: It requires approximately 15°F (-9°C) change in temperature to fully close valve.

TYPE LTC CAPACITY INFORMATION (SCFH) OXYGEN SERVICE - 50 PSI AND 100 PSI LEVELS

		50 psi level				100 psi level			
Size, in. (mm)	C_v	1 psid	2 psid	5 psid	10 psid	1 psid	2 psid	5 psid	10 psid
½ (15)	9.0	4109	5788	9044	12530	5480	7734	12147	16986
¾ (20)	9.0	4109	5788	9044	12530	5480	7734	12147	16986
1 (25)	13.0	5935	8361	13064	18100	7916	11171	17546	24535
1¼ (32)	37.5	17122	24119	37684	52211	22835	32223	50612	70775
1½ (40)	37.5	17122	24119	37684	52211	22835	32223	50612	70775
2 (50)	52.5	23970	33767	52757	73095	31969	45113	70857	99085

TYPE LTC CAPACITY INFORMATION (SCFH) OXYGEN SERVICE - 150 PSI AND 200 PSI LEVELS

		150 psi level				200 psi level			
Size, in. (mm)	C_v	1 psid	2 psid	5 psid	10 psid	1 psid	2 psid	5 psid	10 psid
½ (15)	9.0	6572	9280	14605	20495	7506	10602	16705	23485
¾ (20)	9.0	6572	9280	14605	20495	7506	10602	16705	23485
1 (25)	13.0	9492	13404	21096	29603	10842	15315	24129	33922
1¼ (32)	37.5	27382	38665	60853	85394	31274	44177	69604	97853
1½ (40)	37.5	27382	38665	60853	85394	31274	44177	69604	97853
2 (50)	52.5	38334	54130	85195	119552	43784	61847	97445	136994

Note: psid values are pressure drops across valve.

TO DETERMINE CAPACITY

Determine operating pressure level at the valve and the maximum allowable pressure drop across the valve. Then refer to table above reading down the appropriate column to the selected pipe size. As an example: you are operating at a 150 psi pressure level and the maximum allowable pressure drop across the valve is 2 psi. Look at the second table under the 150 psi level and 2 psid column. For a 1¼" pipe size, the capacity would be 38,665 SCFH. Note: the values shown in the table are for oxygen gas; all capacity figures are standard cubic feet per hour. To determine capacity figures for other gases, consult the conversion chart below and multiply the chart capacities by the factor given.

GAS CONVERSION FACTORS

Gas	Oxygen	Nitrogen	Hydrogen	Helium	Argon
Factor	1.000	1.075	4.000	2.860	0.893

TYPE LTC SELECTION GUIDE

Example:	LTC	C	S	–	01	A
Model						
LTC LTC valve						
Valve size						
C ½ in. (15 mm)						
D ¾ in. (20 mm)						
E 1 in. (25 mm)						
F 1¼ in. (32 mm)						
G 1½ in. (40 mm)						
H 2 in. (50 mm)						
Connection type						
S NPT threaded union ends						
B BSPT threaded union ends						
Design revision						
(-) Indicates original design						
Variation						
01 Catalog standard						
02 With Thermowell						
Temperature range						
A -40 to 0°F (-40 to -18°C)						

CASH VALVE™ TYPE PB5 CRYOGENIC VALVES AND CONTROLS

A broad range of pressure build regulators, pressure reducing valves, final line gas valves and combination pressure build economizer valves for cryogenic service.

Type PB5

FEATURES

- Seven models for pressure reducing or pressure build-up service.
- Five models for back-pressure service on economizer circuit.
- Three models for combined pressure building and economizer functions.
- Low temperature cut-off valves.
- Two models for final line gas service.
- High purity regulating valves for pressure reducing, back pressure and differential services.
- All parts commercially cleaned for cryogenic/oxygen service or high purity gas compatibility.
- Complementary 'Y' pattern strainers reduce maintenance costs.
- Cryogenic safety and shut-off valves also available.

GENERAL APPLICATION

A variety of controls for cryogenic systems including liquid and gas line-pressure build-up regulators, economizer (heat leak) back pressure valves, temperature safety valves, combination valves, shut-off valves and final-line/service-line regulators.

TECHNICAL DATA[1]

Materials:	Bronze, Brass and Stainless steel
Sizes:	¼ to ½ in. (8 to 15 mm)
Connections:	NPT and BSPT
Max initial pressure:	650 psig (44.8 bar)
Temperature ranges:	150 to -320°F (65 to -195°C)

1. Refer to General Specifications Table in page 3 for more information.

© 2019 Emerson. All Rights Reserved.

LIQUID-GAS DISTRIBUTION SYSTEM SCHEMATIC DIAGRAM

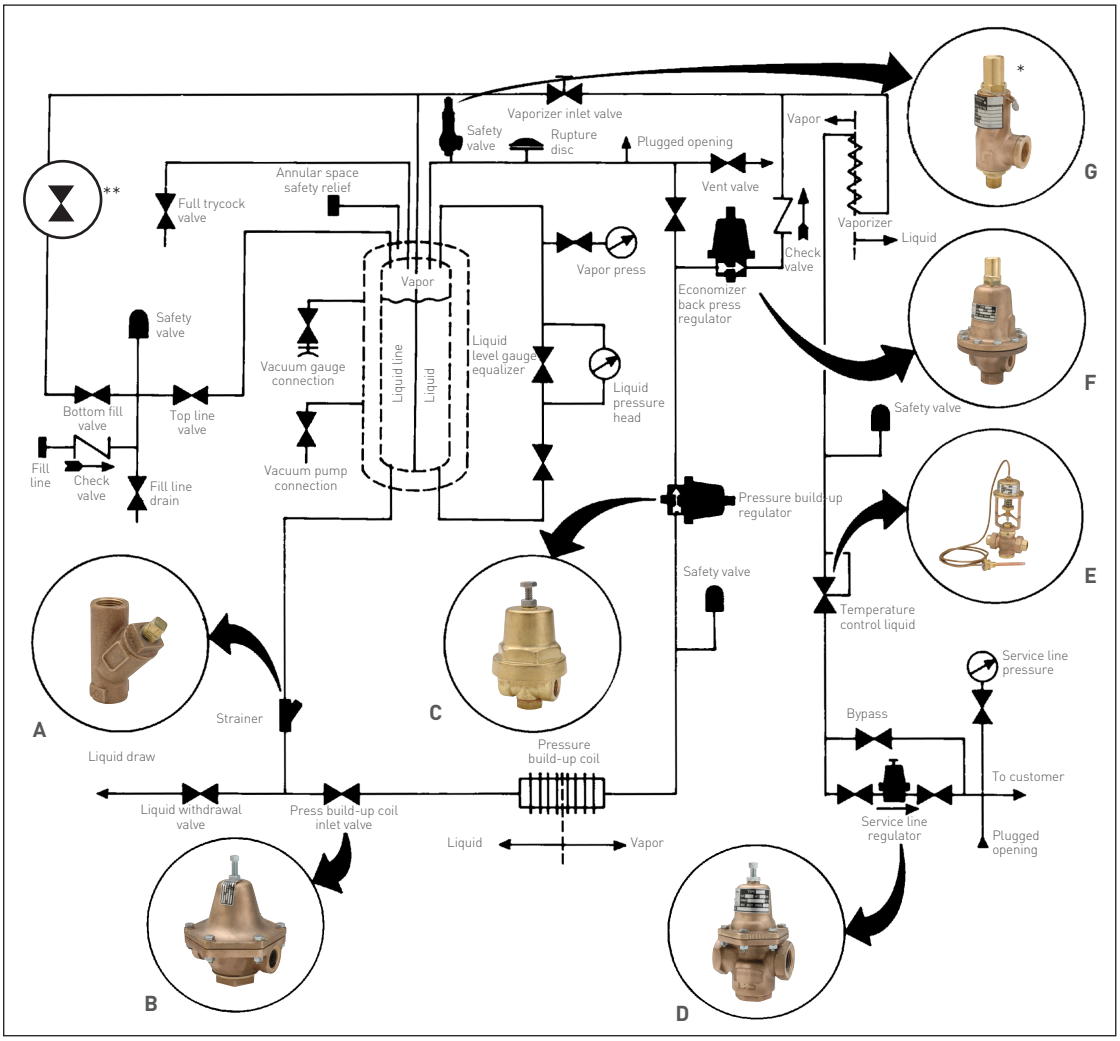

A. Type SY-70C
B. Type B
C. Type A-32
D. Type E-55
E. Type LTC
F. Type FR
G. Type C-776

* Type C-776 cryogenic safety relief valve - for additional information, write or call for data sheet VCTDS-00515.

** Shut-off valve - for additional information, see page 28.

OVERVIEW

Cryogenics - the science of materials at extremely low temperatures - has become increasingly important to industry. One important aspect of this field is the liquification of normally gaseous elements which are used widely throughout the industry, including:

Oxygen	- used extensively in BOF furnaces in the steel industry, for metal cutting, as a rocket fuel and in medicine.
Acetylene	- widely used in welding.
Nitrogen	- used in refrigeration systems, for metal degassing, in aerosol packaging and in cryogenic surgery.
Hydrogen	- used as a rocket propellant and in the production of several metals.
Argon	- widely used in incandescent lamps and fluorescent tubes.
Helium	- used for arc welding, in the manufacture of electron tubes and in cryogenic research.
Carbon Dioxide	- used in refrigeration, to make aerosol tanks and in fire fighting.

Other cryogenic fluids include liquefied natural gas, fluorine, krypton, neon, methane and ethane.

The extensive range of Cash valves and controls is suitable for use in all the major areas of cryogenic converters, or 'dewars', which are either stationary or installed in over-the-road transport vehicles.

GENERAL SPECIFICATIONS

Product	Service	Body Material	Spring Chamber Material	Body Size, in. (mm)	Materials		Maximum Inlet Pressure, psi (bar)	Maximum Outlet Pressure, psi (bar)	Temperature, °F (°C)
					Diaphragm	Seat (Disc)			
PBE-1A	Cryogenic	Brass	Brass	¼ (8)	Bronze	- - - -	600 (41.4)	600 (41.4)	-320 to 150 (-195 to 65)
PBE-2	Cryogenic	Bronze	Bronze	½ (15)	Bronze	- - - -	400 (27.6)	250 (17.2)	-320 to 150 (-195 to 65)
		316 SST	316 SST	½ (15)	316 SST	- - - -	400 (27.6)	400 (27.6)	-320 to 150 (-195 to 65)
PBE-5	Cryogenic	Brass	Brass	½ (15)	Bronze	- - - -	650 (44.8)	600 (41.4)	-320 to 150 (-195 to 65)

COMBINATION PRESSURE BUILDER-ECONOMIZER

PBE Series regulators combine the pressure building and economizer functions into one unit. The economizer phase starts at the point at which the pressure build level is reached, assuring a smooth transition between the two functions. For sizing information, please request engineering data sheets 1074 (PBE-1A) and 1077 (PBE-2).

PBE-1A COMBINATION PRESSURE BUILDER-ECONOMIZER

Construction

Forged brass body and spring chamber; brass and stainless steel trim; bronze diaphragm; stainless steel pressure spring. All parts are commercially cleaned for oxygen service.

Temperature rating: 150 to -320°F (65 to -195°C)
Maximum initial pressure: 600 psi (41.4 bar)

PRESSURE RANGES

psi	bar
15 to 65	1.0 to 4.5
50 to 175	3.4 to 12.1
150 to 350	10.3 to 24.1
300 to 600	20.7 to 41.4

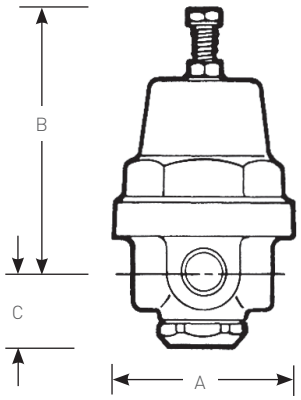

DIMENSIONS

Size		Dimensions						Shipping weight	
		A		B		C			
in.	mm	in.	mm	in.	mm	in.	mm	lbs	kg
¼	8	2.26	57.4	3.16	80.2	0.90	22.9	1.4	0.65

Low pressure - ranges to 175 psig (12.1 bar)
High pressure - ranges 150 to 600 psig (10.3 to 41.4 bar)

CAPACITY INFORMATION

Inlet - psig	Outlet - psig	Air (SCFM) 10% Droop	Air (SCFM) 20% Droop
25	15	4.1	5.8
45	20	4.3	7.0
	30	4.6	7.6
75	50	7.0	11.1
	65	8.0	12.0
125	50	8.3	14.7
	75	9.4	17.4
175	50	9.6	19.4
	75	11.2	21.6
	100	11.9	22.8
225	150	39.3	56.7
	200	31.1	48.0
275	150	42.4	66.7
	225	40.2	64.5
325	150	46.1	75.5
	275	44.0	75.3
475	275	47.8	79.2
	400	47.8	73.9
575	275	55.2	96.0
	500	54.6	89.6

NOTE

1. To obtain capacities for regulators using metal diaphragms, multiply the table values by 0.7

PBE-2 COMBINATION PRESSURE BUILDER-ECONOMIZER

Construction

Bronze or stainless steel body, spring chamber, trim and diaphragms; PTFE seat and diaphragm gasket; stainless steel economizer seat; stainless steel spring, nuts and bolts. All parts are commercially cleaned for oxygen service.

Temperature rating: 150 to -320°F (65 to -195°C)
Maximum initial pressure: 400 psi (27.6 bar)

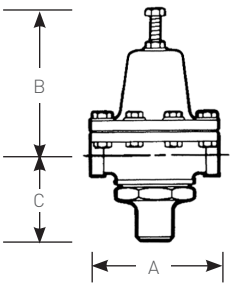

PRESSURE RANGES

psi	(kg/sq cm)
10 to 30	0.69 to 2.1
20 to 75	1.4 to 5.2
25 to 125	1.7 to 8.6
100 to 200	6.9 to 13.8
150 to 250	10.3 to 17.2
200 to 400*	13.8 to 27.6*

*Only for stainless steel body

DIMENSIONS

Size		Dimensions A		Dimensions B		Dimensions C		Shipping weight	
in.	mm	in.	mm	in.	mm	in.	mm	lbs	kg
½	15	5.04	128	5.26	134	3.01	76.6	9	4.08

CAPACITY INFORMATION

Inlet - psig	Outlet - psig	Air (SCFM) 10% Droop	Air (SCFM) 20% Droop
15	10	8.7	11.0
30	10	9.7	14.9
	20	12.4	22.3
	25	13.7	21.3
55	25	25.8	38.4
	50	25.5	41.9
75	25	27.3	41.2
	65	37.6	55.5
100	50	41.7	64.3
	75	48.5	77.1
125	50	42.5	66.0
	75	54.9	87.2
	100	61.5	95.1
150	125	77.5	114.5
200	125	90.8	140.2
	150	96.4	149.5
250	175	103.1	176.1
	225	119.3	197.0

NOTE

1. To obtain capacities for regulators using metal diaphragms, multiply the table values by 0.7

PBE-5 COMBINATION PRESSURE BUILDER-ECONOMIZER

Construction

Forged brass body, bronze spring chamber; brass and stainless steel trim; bronze diaphragms; stainless steel pressure spring; graduated adjustment screw. All parts are commercially cleaned for oxygen service.

Temperature rating: 150 to -320°F (65 to -195°C)
Maximum initial pressure: 650 psi (44.8 bar)

PRESSURE RANGES

psi	bar
0 to 30	0 to 2.1
20 to 50	1.4 to 3.4
40 to 80	2.8 to 5.5
75 to 150	5.2 to 10.3
100 to 275	6.9 to 19.0
200 to 350	13.8 to 24.1
300 to 600	20.7 to 41.4

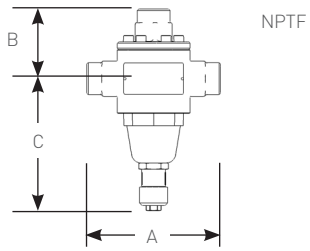

DIMENSIONS

	Size in.	Size mm	Dimensions A in.	Dimensions A mm	Dimensions B in.	Dimensions B mm	Dimensions C in.	Dimensions C mm	Shipping weight lbs	Shipping weight kg
NPTF										
	½	15	5.19	131.8	5.23	132.9	2.76	70.2	7	3.2
Bullnose										
	½	15	149.5	3794	68.25	1734	78.25	1985	8	3.6

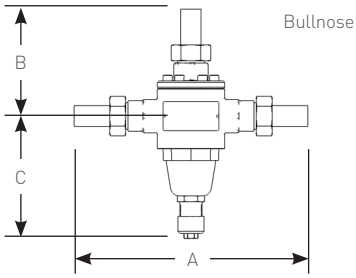

Note: 300 to 600 psi (20.7 to 41.4 bar) range, high pressure
Ranges to 350 psi (24.1 bar), low pressure

CAPACITY INFORMATION

Inlet - psig	Outlet - psig	Air, SCFM	
		10% Droop	20% Droop
10	2	0.4	0.5
	5	0.4	0.5
30	20	2.7	3.6
50	20	3.1	4.4
	25	3.4	4.8
	40	8.6	11.5
75	40	10.4	13.7
	60	11.3	16.5
100	75	20.9	28.9
150	75	29.4	40.9
	100	39.4	55.6
	125	32.9	48.8
200	100	50.5	67.8
	125	53.3	76.5
	150	55.9	80.4
250	125	65.5	90.1
	150	71.2	99.6
	200	78.5	118.4
300	200	94.1	133.3
	250	94.5	136.8
600	300	169.9	258.1
	500	183.1	298.9

NOTE

1. To obtain capacities for regulators using metal diaphragms, multiply the table values by 0.7

STANDARD SPRING RANGE, psig (bar)

Spring Material	Type	1	2	3	4	5	6	7
SST	PBE-1A	15 to 65 (1.0 to 4.5)	50 to 175 (3.4 to 12.1)	150 to 350 (10.3 to 24.1)	300 to 600 (20.7 to 41.4)	- - - -	- - - -	- - - -
	PBE-2	10 to 30 (0.69 to 2.1)	20 to 75 (1.4 to 5.2)	25 to 125 (1.7 to 8.6)	100 to 200 (6.9 to 13.8)	150 to 250 (10.3 to 17.2)	200 to 400 (13.8 to 27.6)*	- - - -
	PBE-5	0 to 30 (0 to 2.1)	20 to 50 (1.4 to 3.4)	40 to 80 (2.8 to 5.5)	75 to 150 (5.2 to 10.3)	100 to 275 (6.9 to 19.0)	200 to 350 (13.8 to 24.1)	300 to 600 (20.7 to 41.4)

* Only available with PBE-2 SST body

TYPES PBE-1, PBE-2, PBE-5 SELECTION GUIDE

Example:	PBE1	A	Z	3	S	01	–	E	1

Model
- **PBE1** PBE-1A valve
- **PBE2** PBE-2 valve
- **PBE5** PBE-5 valve

Valve size
- **A** ¼ in. (8 mm) (PBE-1A)
- **C** ½ in. (15 mm) (PBE-2; PBE-5)

Body and spring chamber
- **Z** Brass/bronze (all)
- **G** 316 SST (PBE-2)

Economizer outlet side (see diagram below)
- **2** Left hand (PBE-1A)
- **3** Right hand; PB out l/h (PBE-1A)
- **B** Bottom (PBE-2; PBE-5)

Option
- **S** Standard
- **C** with check (PBE-2, PBE-5)

Variation
- **01** Standard
- **02** With tube end connections (PBE-5)

Design revision
- **(-)** Indicates original design (PBE-2; PBE-5)
- **B** With active economizer (PBE-1A)

Spring material
- **E** Stainless steel

Spring range
Refer to table above

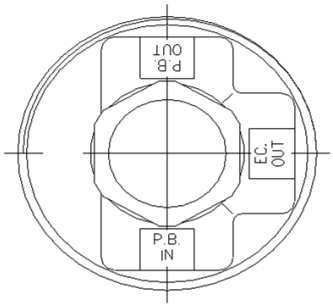

2

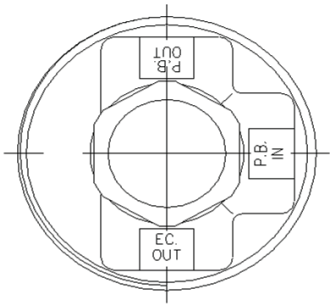

3

CASH VALVE™ CRYOGENIC VALVES AND CONTROLS

A broad range of pressure build regulators, pressure reducing valves, final line gas valves and combination pressure build economizer valves for cryogenic service.

Type A32

Type PB5

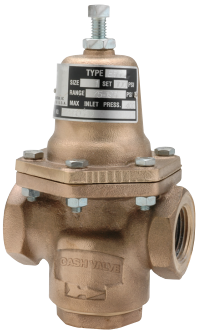

Type E55

Type B

FEATURES

- Seven models for pressure reducing or pressure build-up service.
- Five models for back-pressure service on economizer circuit.
- Three models for combined pressure building and economizer functions.
- Low temperature cut-off valves.
- Two models for final line gas service.
- High purity regulating valves for pressure reducing, back pressure and differential services.
- All parts commercially cleaned for cryogenic/oxygen service or high purity gas compatibility.
- Complementary 'Y' pattern strainers reduce maintenance costs.
- Cryogenic safety and shut-off valves also available.

GENERAL APPLICATION

A variety of controls for cryogenic systems including liquid and gas line-pressure build-up regulators, economizer (heat leak) back pressure valves, temperature safety valves, combination valves, shut-off valves and final-line/service-line regulators.

TECHNICAL DATA[1]

Materials:	Bronze, Brass and Stainless steel
Sizes:	¼ to 2 in. (8 to 50 mm)
Connections:	NPTF
Max initial pressure:	700 psig (48.3 bar)
Temperature ranges:	150 to -320°F (65 to -195°C)

1. Refer to General Specifications Table in page 3 for more information.

© 2019 Emerson. All Rights Reserved.

LIQUID-GAS DISTRIBUTION SYSTEM SCHEMATIC DIAGRAM

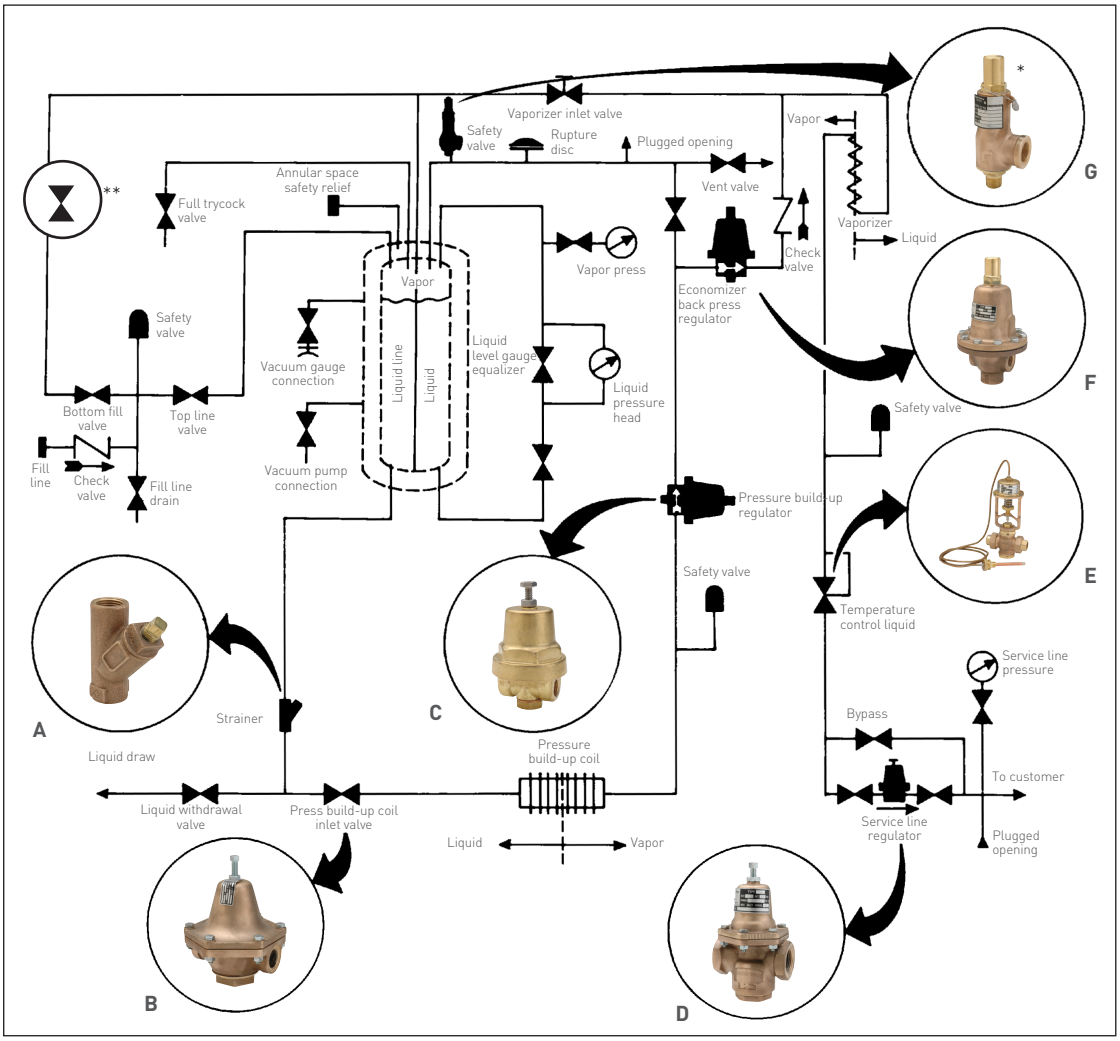

A. Type SY-70C
B. Type B
C. Type A-32
D. Type E-55
E. Type LTC
F. Type FR
G. Type C-776

* Type C-776 cryogenic safety relief valve - for additional information, write or call for data sheet VCTDS-00515.

** Shut-off valve - for additional information, see page 28.

OVERVIEW

Cryogenics - the science of materials at extremely low temperatures - has become increasingly important to industry. One important aspect of this field is the liquification of normally gaseous elements which are used widely throughout the industry, including:

Oxygen	- used extensively in BOF furnaces in the steel industry, for metal cutting, as a rocket fuel and in medicine.
Acetylene	- widely used in welding.
Nitrogen	- used in refrigeration systems, for metal degassing, in aerosol packaging and in cryogenic surgery.
Hydrogen	- used as a rocket propellant and in the production of several metals.
Argon	- widely used in incandescent lamps and fluorescent tubes.
Helium	- used for arc welding, in the manufacture of electron tubes and in cryogenic research.
Carbon Dioxide	- used in refrigeration, to make aerosol tanks and in fire fighting.

Other cryogenic fluids include liquefied natural gas, fluorine, krypton, neon, methane and ethane.

The extensive range of Cash valves and controls is suitable for use in all the major areas of cryogenic converters, or 'dewars', which are either stationary or installed in over-the-road transport vehicles.

GENERAL SPECIFICATIONS

Product	Service	Body Material	Spring Chamber Material	Body Size, in. (mm)	Materials		Maximum Inlet Pressure, psi (bar)	Maximum Outlet Pressure, psi (bar)	Temperature, °F (°C)
					Diaphragm	Seat (Disc)			
A-31	Final Line Gas	Brass	Brass or Aluminum	⅛ to ⅜ (6 to 10)	NBR, Neoprene, or EPR	PTFE, FKM or NBR	300 (20.7)	250 (17.2)	-40 to 180 (-40 to 82)
A-32	Cryogenic	Brass or 303 SST	Brass or Aluminum	¼ and ⅜ (8 and 10)	Bronze or 316 SST	PTFE	600 (41.4)	600 (41.4)	-320 to 150 (-195 to 65)
A-32S	Final Line Gas	Brass	Aluminum	¼ and ⅜ (8 and 10)	NBR or EPR	NBR or PTFE	600 (41.4)	600 (41.4)	-40 to 180 (-40 to 82)
A-36	Cryogenic	Bronze or 316 SST	Bronze or 316 SST	¼ and ⅜ (8 and 10)	Bronze or 316 SST	PTFE	600 (41.4)	600 (41.4)	-320 to 150 (-195 to 65)
A-401	Cryogenic	Bronze	Brass	½ (15)	Bronze	PTFE	600 (41.4)	600 (41.4)	-320 to 150 (-195 to 65)
	Final Line Gas	Bronze	Brass	½ (15)	Bronze or Neoprene	PTE or FKM	600 (41.4)	600 (41.4)	-20 to 180 (-29 to 82)
B	Cryogenic	Bronze	Bronze	¼ to 2 (8 to 50)	Bronze or 316 SST	PTFE	400 (27.6)	250 (17.2)	-320 to 150 (-195 to 65)
	Final Line Gas	Bronze	Bronze	¼ to 2 (8 to 50)	NBR	NBR or EPM	400 (27.6)	150 (10.3)	0 to 180 (-17 to 82)
B95	Cryogenic	316 SST	316 SST	½ (15)	316 SST	PTFE	720 (49.6)	600 (41.4)	-320 to 150 (-195 to 65)
				¾ (20)	316 SST	PTFE	720 (49.6)	250 (17.2)	-320 to 150 (-195 to 65)
				1 (25)	316 SST	PTFE	720 (49.6)	400 (27.6)	-320 to 150 (-195 to 65)
	Final Line Gas	316 SST	316 SST	½ (15)	NBR	NBR	720 (49.6)	600 (41.4)	0 to 150 (-17 to 65)
				¾ (20)	NBR	NBR	720 (49.6)	250 (17.2)	0 to 150 (-17 to 65)
				1 (25)	NBR	NBR	720 (49.6)	400 (27.6)	0 to 150 (-17 to 65)
E-55	Cryogenic	Bronze	Bronze	1 ¼ to 2 (32 to 50)	316 SST	PTFE	400 (27.6)	300 (20.7)	-320 to 150 (-195 to 65)
	Final Line Gas	Bronze	Bronze	½ to 1 (15 to 25)	Neoprene	PTE or FKM	400 (27.6)	250 (17.2)	0 to 150 (-17 to 65)
				1 ¼ to 2 (32 to 50)	Neoprene	FKM	400 (27.6)	300 (20.7)	0 to 150 (-17 to 65)
FR	Cryogenic	Bronze or 316 SST	Bronze or 316 SST	½ to 2 (15 to 50)	Bronze or 316 SST	PTFE	400 (27.6)	400 (27.6)	-320 to 150 (-195 to 65)
	Cryogenic/High Purity	316L SST	316 SST	¾ to 1 (20 to 25)	SST	SST	600 (41.4)	600 (41.4)	-425 to 400 (-254 to 204)
FR-6	Cryogenic	Bronze or 316 SST	Bronze or 316 SST	½ to 2 (15 to 50)	Bronze or 316 SST	PTFE	600 (41.4)	600 (41.4)	-320 to 150 (-195 to 65)
FRM	Cryogenic	Brass, 316 SST or 303 SST	Brass or Chrome Plated Brass	¼ and ⅜ (8 and 10)	Bronze or 316 SST	- - - -	600 (41.4)	600 (41.4)	-320 to 150 (-195 to 65)
FRM-2	Cryogenic	Brass or 316 SST	Brass or 316 SST	¼ to ½ (8 to 15)	Bronze or 316 SST	- - - -	600 (41.4)	600 (41.4)	-320 to 150 (-195 to 65)
G-60	Cryogenic	Bronze or 316 SST	Bronze or 316 SST	¼ to 1 ½ (8 to 40)	Bronze or 316 SST	PTFE	600 (41.4)	600 (41.4)	-320 to 150 (-195 to 65)
	Cryogenic/High Purity	316L SST	316L SST	½ (15)	SST	Kel-F/PTFE	400 (27.6)	400 (27.6)	-425 to 400 (-254 to 204)
	Final Line Gas	Bronze	Bronze or 316 SST	¼ to 1 ½ (8 to 40)	Bronze, 316 SST, Monel® or NBR	PTFE, FKM or NBR	400 (27.6)	400 (27.6)	-20 to 180 (-29 to 82)
		316 SST	Bronze or 316 SST	¼ to 1 ½ (8 to 40)	Bronze, 316 SST, Monel® or NBR	PTFE, FKM or NBR	700 (48.3)	600 (41.4)	-20 to 180 (-29 to 82)
LTC	Cryogenic	Bronze	Bronze	½ to 2 (15 to 50)	Bronze	PTFE	400 (27.6)	400 (27.6)	-40 to 0 (-40 to -18)
PBE-1A	Cryogenic	Brass	Brass	¼ (8)	Bronze	- - - -	600 (41.4)	600 (41.4)	-320 to 150 (-195 to 65)
PBE-2	Cryogenic	Bronze	Bronze	½ (15)	Bronze	- - - -	400 (27.6)	250 (17.2)	-320 to 150 (-195 to 65)
		316 SST	316 SST	½ (15)	316 SST	- - - -	400 (27.6)	400 (27.6)	-320 to 150 (-195 to 65)
PBE-5	Cryogenic	Brass	Brass	½ (15)	Bronze	- - - -	650 (44.8)	600 (41.4)	-320 to 150 (-195 to 65)

FINAL LINE CIRCUIT (HOUSE LINE)

Liquid is forced into the vaporizer through the liquid line by the action of the vapor pressure in the tank. The liquid in the vaporizer is warmed by ambient air (or sometimes by steam) and changed into gas, which is then distributed through the final-line regulator. As the gas is at or near ambient temperature, the diaphragm and seat in the regulator can be furnished in standard rubber materials.

A-31 PRESSURE REDUCING VALVE FOR FINAL-LINE GAS SERVICE

Construction

Brass forged body, brass piston; NBR seat disc and diaphragm; aluminum spring chamber; stainless steel spring. All parts are commercially cleaned for oxygen service. Standard valve has side inlet-side outlet connections. Also available with side gauge connections.

Temperature rating: 180 to -40°F (82 to -40°C)
Maximum initial pressure: 300 psi (20.7 bar)

STANDARD SPRING RANGES, psig (bar)

Spring Material	Type	1	2	3	4	5	6	7	8	9
Steel	A16	2 to 30 (0.14 to 2.1)	10 to 50 (0.69 to 3.4)	25 to 90 (1.7 to 6.2)	80 to 120 (5.5 to 8.3)	100 to 180 (6.9 to 12.4)	- - - -	- - - -	- - - -	- - - -
	A31, A31S, A32	2 to 30 (0.14 to 2.1)	10 to 50 (0.69 to 3.4)	30 to 90 (2.1 to 6.2)	80 to 120 (5.5 to 8.3)	100 to 180 (6.9 to 12.4)	- - - -	- - - -	- - - -	- - - -
	A31VR (in/hg)	0 to 15 (0 to 0.5)	10 to 30 (0.34 to 1.0)	- - - -	- - - -	- - - -	- - - -	- - - -	- - - -	- - - -
SST	A31	2 to 15 (0.14 to 1.0)	2 to 25 (0.14 to 1.7)	15 to 65 (1.0 to 4.5)	40 to 100 (2.8 to 6.9)	50 to 150 (3.4 to 10.3)	75 to 175 (5.2 to 12.1)	100 to 250 (6.9 to 17.2)	- - - -	- - - -
	A32	2 to 15 (0.14 to 1.0)	2 to 25 (0.14 to 1.7)	15 to 65 (1.0 to 4.5)	40 to 100 (2.8 to 6.9)	50 to 150 (3.4 to 10.3)	75 to 175 (5.2 to 12.1)	100 to 250 (6.9 to 17.2)	200 to 400 (13.8 to 27.6)	300 to 600 (20.7 to 41.4)
	A31S	2 to 15 (0.14 to 1.0)	- - - -	- - - -	- - - -	- - - -	- - - -	- - - -	- - - -	- - - -

DIMENSIONS

Size		Dimensions						Shipping weight	
		A		B		C			
in.	mm	in.	mm	in.	mm	in.	mm	lbs	kg
¼	8	2.30	58.3	3.29	83.5	0.84	21.3	1⅛	0.51

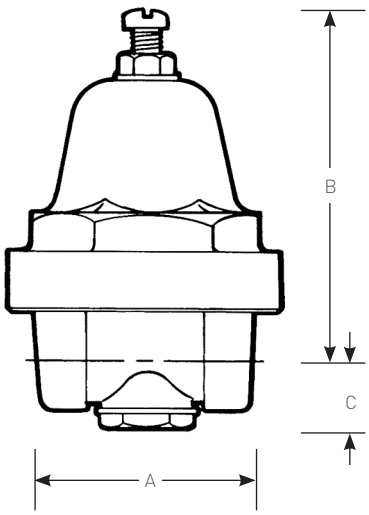

A16, A31, A31S, A31VR, A32S SELECTION GUIDE

Example:	A16-	A	W	S	A	S	B	B	F	02	-	D	1

Model

A16-	A16	**A31V**	A31VR
A31-	A31	**A32S**	A32S
A31S	A31S		

Size

Y	⅛ in. (6 mm) (A31, A31S)
A	¼ in. (8 mm) (A16, A31, A31S, A31VR, A32S)
B	⅜ in. (10 mm) (A16, A31, A31S)

Service

W	Water/air
F	Final line gas (A31)
V	Vacuum service (A32VR)

Body/connection style

S	Side inlet/side outlet - straight thru (A16, A31)
R	Side inlet/side outlet - straight thru with right side gauge port (A31S)
L	Side inlet/side outlet - straight thru with left side gauge port (A16, A31S)
B	Side inlet/bottom outlet with straight thru gauge connection (A31VR)

Spring chamber material

A	Aluminum spring chamber (A16, A31, A31S, A32S)
Z	Brass spring chamber (A31, A31VR only)

Spring chamber style

S	Standard
N	Non-vented
P	Panel mount

Diaphragm material

B	NBR (A16, A31, A31S, A32S)	**R**	EPR (A31VR, A32S)
L	NBR with PTFE liner (A31, A31S)	**F**	EPR with PTFE liner (A31VR)
N	Neoprene (A31, A31S)		
T	Neoprene with PTFE liner (A31, A31S)		

Seat material

B	NBR (A16, A31, A31S, A32S)	**S**	Silicone (A31VR)
T	PTFE (A31, A32S)	**K**	Kalrez (A31VR)
V	FKM (A31, A31S)		

Pressure screw style

F	Fillister (A16, A31, A31S, A32S)	**K**	Knurled (A31VR)
T	T-handle (A31, A31S)	**W**	Handwheel plastic (A21)
H	Hex (A31, A31S)		

Variations

01	Standard	**11**	Standard variation with inlet screen (A31)
02	Balanced piston (A31, A31S)	**12**	Balanced piston with inlet screen (A31)

Design revision

(-)	Original design

Spring material

D	Carbon steel (Industrial or final line gas service only)
E	Stainless steel

Spring range

Refer to table on page 26

HIGH PURITY REGULATING VALVES

A line of high purity regulating valves for electronic grade and other high purity gases is also available. This includes pressure reducing valves, back pressure valves and valves suitable for differential service.
Valve bodies are investment cast 316L stainless steel, with internal trim 316L bar stock. Interior (wetted) surface finish is 15 micro inch or better. The finish is electropolished. Also, all maintenance may be carried out without removing the valve from the line.

Sizes are ½ and 1½ in. (15 and 40 mm), butt weld ends, 0.065 wall (½ in. size, 0.049 wall). Spring ranges are typically up to 400 psig (27.6 bar) control.

Temperature limits are 400 to -425°F (204 to -254°C). All valves are cleaned for high purity gas compatibility.

Contact your sales representative for additional information and pricing.

Reference:
G60HP-pressure build service
FRHP-economizer service

C-776 SAFETY VALVE

Type C-776 cryogenic safety valves are available in sizes from ½ to 2 in.(15 to 50 mm).

Request data sheet VCTDS-00515 for details.

2300 SHUT-OFF VALVE

Type 2300 is a brass shut-off globe style valve with ¼, ⅜ and ½ in. (8, 10 and 15 mm) NPTF connections. It offers the option of a stainless steel stub end inlet connection with a ⅜ in. (10 mm) NPTF outlet connection.

Temperature rating:	150 to -320°F (65 to 195°C)
Maximum inlet pressure:	700 psig (48.3 bar)

TYPE 2300 SELECTION GUIDE

Example:	2300	A	S	P	–	01
Model						
2300 2300 shut-off valve						
Valve size						
A ¼ in. (8 mm)						
B ⅜ in. (10 mm)						
C ½ in. (15 mm)						
Body connection						
S Side in/side out withNPT connections						
B Side in/side out withBSPP connections						
1 Inlet ⅜ sch.10 x 1.125 long pipe/outlet ⅜ NPT						
2 Inlet ⅜ sch.10 x 2.125 long pipe/outlet ⅜ NPT						
3 Inlet ⅜ sch.10 x 3.375 long pipe/outlet ⅜ NPT						
4 Inlet and outlet ⅜ sch.10 x 1.125 long pipe						
5 Inlet ½ sch. 5S x 2.125 long pipe/outlet ½ NPT						
Handwheel colors						
P Plain						
B Blue						
G Green						
R Red						
Design revision						
(-) Indicates original design						
Variation						
01 Standard						
02 With 4 in. (102 mm) extended stem						

SY-70C 'Y' PATTERN STRAINERS

These strainers are suited for most cryogenic applications. Installed in the line ahead of automatic regulators, they protect valve seats, gauges, meters, regulators and other equipment from most foreign material to reduce maintenance costs and replacement expense.

Construction

ASTM B62 high-tensile cast bronze body, 100 mesh Monel® strainer screen; a brass blowoff plug is shipped with each strainer. All parts are commercially cleaned for cryogenic service.

Temperature rating: 150 to -320°F (65 to 195°C)
Maximum set pressure: 400 psi (27.6 bar)

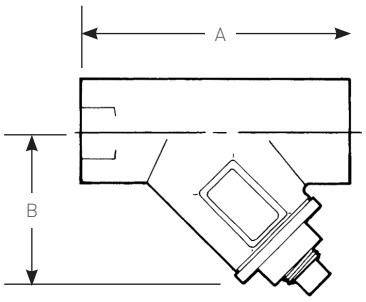

DIMENSIONS

Strainer size		Blow off plug size		Dimensions				Shipping weight	
				A		B			
in.	mm	in.	mm	in.	mm	in.	mm	lbs	kg
½	15	¼	8	2 15/16	74.68	1 27/32	46.99	0.6	0.27
¾	20	¼	8	3⅝	91.95	1 15/16	49.53	1.3	0.59
1	25	⅜	10	4½	114.30	2¾	69.85	2	0.91
1¼	32	⅜	10	5⅛	130.30	3 11/32	85.09	3.1	1.41
1½	40	½	15	5 13/16	147.58	3¾	95.25	4.1	1.86
2*	50	¾	20	6 13/16	172.58	4 13/16	122.68	9	4.08

Capacity information

Capacity information is available on request. Write to the factory supplying full valve and application specifications.

NOTE

NPTF, also referred to as 'Dryseal' thread, is designed to provide a more leak-free seal without the use of PTFE tape or other sealant compound. NPTF threads are interchangeable with NPT threads and are standard on all Cash Valve products.

CASH VALVE™ TYPE C-776 SAFETY VALVES

A full lift ASME Section VIII air/gas and cryogenic, UV National Board certified safety valve suitable for cryogenic service

UV

FEATURES

- Ideal for cryogenic service to -320°F (-195°C).
- Kel-F® soft seat disc ensures positive reseating and leak tight seal.
- Full lift maximum discharge capacity.
- Unobstructed flow through top guided design.
- Pressure tight dome.
- Stainless steel springs as standard. Inconel® springs supplied for higher pressures.
- All parts are commercially cleaned for oxygen service.
- Built to ASME Code Section VIII for cryogenic service.
- Rated capacity: 110% of set pressure.

GENERAL APPLICATION

Protects piping, storage tanks and process equipment used in the distribution of industrial gases against damage caused by liquefied gas expansion. Ideal for oxygen, nitrogen, argon, carbon dioxide, helium, hydrogen and other industrial gases.

TECHNICAL DATA

Materials:	Bronze
Sizes:	½" x ¾" to 2" x 2½"
Connections:	Threaded NPTF
Pressure ranges	
½" to ¾" size:	15 to 600 psig* (1 to 41.3 barg)
1" to 2" size:	15 to 500 psig (1 to 34.5 barg)
Temperature range:	-320 to +150°F (-195 to 65.6°C)

* ¾" x 1¼" maximum pressure 500 psig (34.5 barg)

© 2017 Emerson. All Rights Reserved.

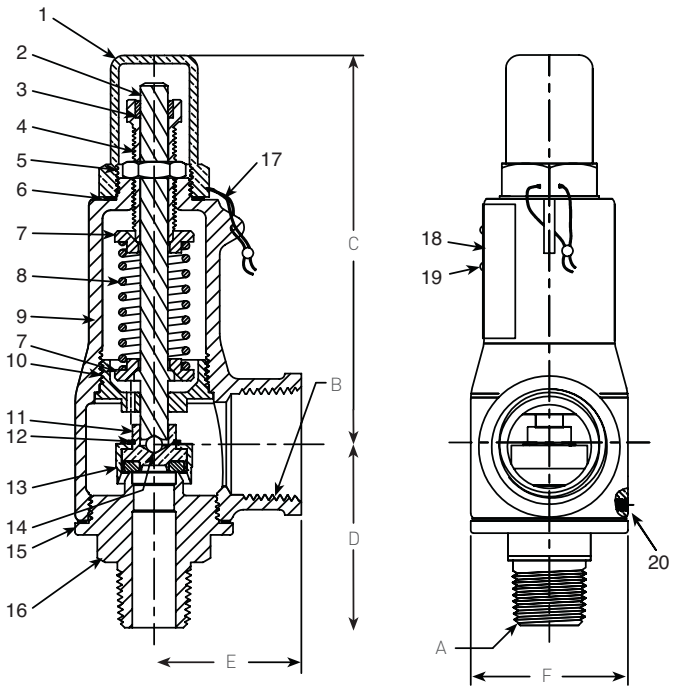

LIST OF MATERIALS

Item	Qty.	Description	Material
1	1	Adj. screw cap	Brass ASTM B16
2	1	Pull rod	Brass ASTM B16
3	1	Bushing	Virgin PTFE
4	1	Adjusting screw	Brass ASTM B16
5	1	Nut	Brass ASTM B16
6	1	Gasket	Gylon PTFE
7	2	Pressure plate	Brass ASTM B16
8	1	Spring	302 SST A313/Inconel® B637
9	1	Body	Bronze
10	1	Guide bushing	Brass ASTM B16
11	1	Seat assembly	Brass/Kel-F®
12	1	Retaining ring	SST
13	1	Seat shell	Brass ASTM B16
14	1	Ball	Monel®
15	1	Gasket	Gylon PTFE
16	1	Body seat	Brass ASTM B16
17	1	Wire seal	SST/Lead
18	1	Name plate	Aluminum
19	2	Drive screw	SST
20	1	Set screw	SST

DIMENSIONS

Valve size	Inlet size A	Outlet size B	C In. (mm)	D In. (mm)	E In. (mm)	F In. (mm)	Orifice Area in² (mm²)	Weight lb. (kg)
½"	½"	¾"	4.46 (113.3)	2.11 (53.5)	1.69 (42.9)	1.81 (46.0)	0.169 (109)	2.2 (1.00)
½"	½"	1"	4.46 (113.3)	2.11 (53.5)	1.69 (42.9)	1.81 (46.0)	0.169 (109)	2.2 (1.00)
¾"	¾"	1"	4.46 (113.3)	2.11 (53.5)	1.69 (42.9)	1.81 (46.0)	0.169 (109)	2.2 (1.00)
¾"	¾"	1¼"	6.55 (166.3)	2.88 (73.1)	2.15 (54.6)	2.63 (66.7)	0.486 (314)	3.5 (1.59)
1"	1"	1¼"	6.55 (166.3)	2.88 (73.1)	2.15 (54.6)	2.63 (66.7)	0.486 (314)	3.5 (1.59)
1¼"	1¼"	1½"	7.32 (185.9)	3.06 (77.7)	2.37 (60.1)	3.00 (76.2)	0.645 (416)	4.6 (2.09)
1½"	1½"	2"	9.36 (237.6)	3.28 (83.3)	2.75 (69.9)	3.74 (95.0)	1.024 (661)	8.8 (3.99)
2"	2"	2½"	10.99 (279.1)	3.74 (94.9)	3.19 (81.0)	4.65 (118.0)	1.667 (1075)	15.4 (6.99)

NOTE

NPTF, also referred to as 'Dryseal' thread, is designed to provide a more leak-free seal without the use of PTFE tape or other sealant compound. NPTF threads are interchangeable with NPT threads and are standard on all Cash Valve products.

SPECIFICATIONS - Capacity (Air capacity in SCFM by size - ambient temperature)

Set pressure psig (bar)	½" x ¾" ½" x 1" ¾" x 1"	¾" x 1¼" 1" x 1¼"	1¼" x 1½"	1½" x 2"	2" x 2½"
15 (1.03)	80	230	305	485	789
20 (1.38)	92	265	352	559	910
30 (2.07)	117	336	446	707	1152
40 (2.76)	144	413	548	870	1417
50 (3.45)	171	491	651	1034	1683
60 (4.14)	198	568	754	1197	1948
70 (4.83)	224	645	857	1360	2214
80 (5.52)	251	723	959	1523	2479
90 (6.21)	278	800	1062	1686	2745
100 (6.90)	305	878	1165	1849	3010
110 (7.58)	332	955	1268	2012	3276
120 (8.27)	359	1032	1370	2175	3541
130 (8.96)	386	1110	1473	2339	3807
140 (9.65)	413	1187	1576	2502	4073
150 (10.34)	440	1265	1679	2665	4338
160 (11.03)	467	1342	1781	2828	4604
170 (11.72)	494	1420	1884	2991	4869
180 (12.41)	521	1497	1987	3154	5135
190 (13.10)	547	1574	2090	3317	5400
200 (13.79)	574	1652	2192	3480	5666
210 (14.48)	601	1729	2295	3644	5931
220 (15.17)	628	1807	2398	3807	6197
230 (15.86)	655	1884	2500	3970	6463
240 (16.55)	682	1962	2603	4133	6728
250 (17.24)	709	2039	2706	4296	6994
260 (17.93)	736	2116	2809	4459	7259
270 (18.62)	763	2194	2911	4622	7525
280 (19.31)	790	2271	3014	4785	7790
290 (20.00)	817	2349	3117	4949	8056
300 (20.69)	844	2426	3220	5112	8321
310 (21.37)	871	2503	3322	5275	8587
320 (22.06)	897	2581	3425	5438	8852
330 (22.75)	924	2658	3528	5601	9118
340 (23.44)	951	2736	3631	5764	9384
350 (24.13)	978	2813	3733	5927	9649
400 (27.58)	1113	3200	4247	6743	10977
450 (31.03)	1247	3587	4761	7558	12305
500 (34.48)	1382	3974	5275	8374	13632
550 (37.92)	1517	----	----	----	----
600 (41.37)	1651	----	----	----	----

Discharge capacities in standard cubic feet per minute of air at 110% of set pressure or set pressure +3 psi, whichever is greater.

Gas	Oxygen	Nitrogen	Hydrogen	Helium	CO_2	Argon	Methane
Factor	1.05	0.98	0.26	0.37	1.24	1.18	0.74

1. For gases other than air, multiply the required gas flow for your gas by the appropriate factor above to obtain the equivalent air flow. Then use the capacity chart above for determining valve size.
2. To find the gas flow equivalent to the air flow given in the above chart, divide the chart flow by the appropriate factor above.

Capacity data based on a maximum back pressure of 10%.

CASH VALVE™ TYPE C-776 SAFETY VALVES

SELECTION GUIDE

Example:	C776	B	D	CD	K	01	-	K	M	1

Model

C776 C776 valve

Connection/body and nozzle material

B Male x female NPTF bronze

Orifice area

		Valve (inlet/outlet) size	
D	(0.169 in²)	**CD**	½ x ¾
D	(0.169 in²)	**CE**	½ x 1
D	(0.169 in²)	**DE**	¾ x 1
E	(0.340 in²)	**AP**	1 x 1¼
F	(0.486 in²)	**DF**	¾ x 1¼
F	(0.486 in²)	**EF**	1 x 1¼
G	(0.645 in²)	**FG**	1¼ x 1½
H	(1.024 in²)	**GH**	1½ x 2
J	(1.667 in²)	**HJ**	2 x 2½

Seat material

K Kel-F®

Variation

01 Threaded cap

Design revision

(-) Indicates original design

Service

K Air/gas ASME Section VIII

N Non-code air/gas

Spring material

M 302 SST or Inconel® X750

Spring range

Refer to table below

STANDARD SPRING RANGES (PSIG)

Orifice area	Size	1	2	3	4	5	6	7	8	9	10	11	12	13	14	15
D - [0.169 in²]	CD - ½" x ¾" CE - ½" x 1" DE - ¾" x 1"	15-25	26-35	36-46	47-61	62-80	81-105	106-135	136-185	186-250	251-315	316-435	436-500	501-550	551-600	----
E - [0.340 in²]	AP - 1" x 1¼"	21-36	37-56	57-70	71-85	86-107	108-133	134-165	166-220	221-311	312-360	361-400	----	----	----	----
F - [0.486 in²]	DF - ¾" x 1¼" EF - 1" x 1¼"	15-25	26-37	38-46	47-58	59-73	74-92	93-110	111-120	121-180	181-250	251-325	326-359	360-390	391-435	436-500
G - [0.645 in²]	FG - 1¼" x 1½"	15-25	26-38	39-46	47-57	58-70	71-90	91-115	116-130	131-175	176-200	201-300	301-400	401-500	----	----
H - [1.024 in²]	GH - 1½" x 2"	15-24	25-37	38-53	54-70	71-84	85-101	102-120	121-150	151-170	171-220	221-300	301-409	410-500	----	----
J - [1.667 in²]	HJ - 2" x 2½"	15-25	26-40	41-57	58-74	75-98	99-130	131-150	151-205	206-258	259-300	301-400	401-450	----	----	----

NOTES

Please specify the required set point on your order.

CASH VALVE™ MODEL C600 CRYOGENIC RELIEF VALVE

A pressure relief valve for industrial gas service at temperatures down to -320°F (-196°C)

FEATURES

- All valves are cleaned and packaged for oxygen service.
- Bubble tight to 95% of set pressure.
- Color coded labels for ease of set pressure identification.
- PTFE and fluorosilicone seat materials provide leak free performance and longer cycle life.
- Reseat pressure greater than 75% of set pressure.
- Pipe away adapter available.
- Tamper resistant adjustment screw.
- Repeatable performance.
- 100% factory tested.

GENERAL APPLICATION

The C600 protects piping, storage tanks and process equipment used in the distribution of industrial gases against damage caused by liquefied gas expansion.

TECHNICAL DATA

Material:	
Body	Brass
Seat	PTFE or Fluorosilicone
Spring	Stainless steel
Sizes:	¼", ⅜", ½"
Connections:	Threaded NPT and SAE-6
Pressure range:	15 to 600 psig (1.1 to 41.3 barg)
Temperature range:	-320° to +200°F (-196° to +93.3°C)

Code: ASME UV TS

© 2017 Emerson. All Rights Reserved.

CASH VALVE™ MODEL C600 CRYOGENIC RELIEF VALVE

SPECIFICATIONS

PARTS AND MATERIALS

Item	Description	Material
1	Body	BRS ASMT B16
2	Piston sub	BRS ASMT B16 / PTFE
3	Adjusting screw	BRS ASMT B16
4	Spring	SST ASTM A313-302 / 17-7
5	Label	Polyester

SIZES (in)

Valve size	Height	Wrenching hex	Orifice size
¼	2.83	⅞	0.29
⅜	2.83	⅞	0.29
½	3.00	⅞	0.29

LABEL CODES

Psi	Bar	Color
22	1.5	Yellow
35	2.4	Purple
50	3.4	White
100	6.9	Gray
125	8.6	Green
150	10.3	Red
230	15.9	Blue
250	17.2	Light blue
350	24.1	Orange
400	27.6	Black
450	31.0	Pink
500	34.5	Light green

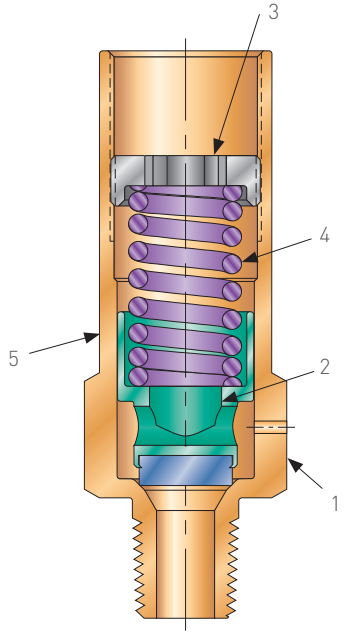

PTFE SEAT

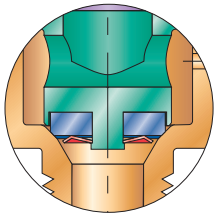

OPTIONAL FLUOROSILICONE SEAT

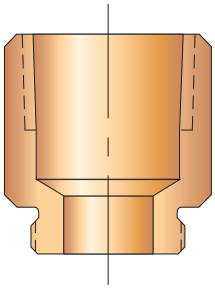

OUTLET PIPE ADAPTER

Variation 02: ⅜ NPT connection

Variation 03: ½ NPT connection

SERVICE: ASME SECTION VIII AIR, ENGLISH, (SCFM) SLOPE = 0.792 SCFM/PSIA

Set press. (psig)	Capacity (SCFM)	Set press. (psig)	Capacity (SCFM)	Set press. (psig)	Capacity (SCFM)	Set press. (psig)	Capacity (SCFM)
15	26	100	99	270	247	440	395
20	30	110	107	280	256	450	404
25	34	120	116	290	264	460	412
30	38	130	125	300	273	470	421
35	42	140	134	310	282	480	430
40	46	150	142	320	290	490	439
45	51	160	151	330	299	500	447
50	55	170	160	340	308	510	456
55	60	180	168	350	317	520	465
60	64	190	177	360	325	530	473
65	68	200	186	370	334	540	482
70	73	210	195	380	343	550	491
75	77	220	203	390	351	560	500
80	81	230	212	400	360	570	508
85	86	240	221	410	369	580	517
90	90	250	229	420	378	590	526
95	94	260	238	430	386	600	534

SERVICE: ASME SECTION VIII AIR, METRIC, (Nm^3/hr) SLOPE = 17.05 (Nm^3/hr)/BARA

Set press. (barg)	Capacity (Nm^3/hr)	Set press. (barg)	Capacity (Nm^3/hr)	Set press. (barg)	Capacity (Nm^3/hr)	Set press. (barg)	Capacity (Nm^3/hr)
1.1	40	7.5	158	18	355	31	599
1.5	46	8	167	19	374	32	617
2	55	8.5	177	20	392	33	636
2.5	64	9	186	21	411	34	655
3	74	9.5	195	22	430	35	674
3.5	83	10	205	23	449	36	692
4	92	11	224	24	467	37	711
4.5	102	12	242	25	486	38	730
5	111	13	261	26	505	39	749
5.5	120	14	280	27	524	40	767
6	130	15	299	28	542	41	786
6.5	139	16	317	29	561	41.3	792
7	149	17	336	30	580		

SELECTION GUIDE

Example:	C600	M	A	B	T	-	01	K	1

Model
C600 Safety valve

Connection
M Male NPT
S Male SAE

Connection size
A ¼"
B ⅜"
C ½"
D 9/16" (SAE only)

Orifice size
B (0.066 in²)

Seat material
T PTFE (90 - 600 psig only)
F Fluoroscilicone (FVMQ) (15 - 140 psig only)

Design variation
(-) Indicates original design

Variation
01 Standard version
02 With pipe adapter ⅜" NPT
03 With pipe adapter ½" NPT

Service
K Air/gas ASME Section VIII (PTFE seat only)
N Non-code air/gas

Spring range
Refer to table below

STANDARD SPRING RANGES (psig)

Seat Material	Spring Material	1	2	3	4	5	6	7
F - FVMQ	SST	15 - 45	46 - 89	90 - 135	136 - 140	- - - -	- - - -	- - - -
T - PTFE		- - - -	- - - -		136 - 235	236 - 350	351 - 500	501 - 600

Note:
Please specify the required set point on your order.

NOTES:

Final Control North America

McKinney
3200 Emerson Way
McKinney, Texas, 750
United States
T +1 800 558 5853
T +1 972 548 3574

Emerson Automation Solutions
World Area Headquarters

Asia Pacific
1 Pandan Crescent
Singapore 128461
T +65 6777 8211

Europe
Neuhofstrasse 19a P.O. Box
1046 CH 6340 Baar,
Switzerland
T +41 41 768 6111

Middle East & Africa
Emerson FZE P.O. Box 17033,
Jebel Ali Free Zone - South 2,
Dubai, United Arab Emirates
T +971 4 8118100

webadmin.regulators@emerson.com

CashValve.com

D353520X012 © 2026 Emerson Electric Co. All rights reserved. Cash Valve is a mark owned by a subsidiary of Emerson Electric Co. The Emerson logo is a trademark and service mark of Emerson Electric Co. All other marks are property of their respective owners.

Neither Emerson nor any of its affiliated entities assume responsibility for the selection, use or maintenance of any product. Responsibility for proper selection, use, and maintenance of any product remains solely with the purchaser and end user.

The contents of this publication are presented for informational purposes only, and while every effort has been made to ensure their accuracy, they are not to be construed as warranties or guarantees, express or implied, regarding the products or services described herein or their use or applicability. All sales are governed by our terms and conditions, which are available upon request. We reserve the right to modify or improve the designs or specifications of such products at any time without notice.